XRAY XB8E 19

1/8 LUXURY ELECTRIC OFF-ROAD BUGGY

INSTRUCTION MANUAL

INTRODUCTION

The XB8E is a high-competition, high-quality, 1/8 electric off-road car intended for persons aged 16 years and older with previous experience building and operating RC model racing cars. This is not a toy; it is a precision racing model. This model racing car is not intended for use by beginners, inexperienced customers, or by children without direct supervision of a responsible, knowledgeable adult. If you do not fulfill these requirements, please return the kit in unused and unassembled form back to the shop where you have purchased it.

Before building and operating your XB8E, YOU MUST read through all of the operating instructions and instruction manual and fully understand them to get the maximum enjoyment and prevent unnecessary damage. Read carefully and fully understand the instructions before beginning assembly.

Make sure you review this entire manual, download and use set-up book from the web, and examine all details carefully. If for some reason you decide the XB8E is not what you wanted or expected, do not continue any further. Your hobby dealer cannot accept your XB8E kit for return or exchange after it has been partially or fully assembled.

Contents of the box may differ from pictures. In line with our policy of continuous product development, the exact specifications of the kit may vary without prior notice.

CUSTOMER SUPPORT

We have made every effort to make these instructions as easy to understand as possible. However, if you have any difficulties, problems, or questions, please do not hesitate to contact the XRAY support team at info@teamxray.com. Also, please visit our Web site at www.teamxray.com to find the latest updates, set-up information, option parts, and many other goodies. We pride ourselves on taking excellent care of our customers.

You can join thousands of XRAY fans and enthusiasts in our online community at: **www.teamxray.com**

XRAY Europe
K Výstavisku 6992
91101 Trenčín
Slovakia, EUROPE
Phone: +421-32-7401100
Fax: +421-32-7401109
Email: info@teamxray.com

XRAY USA
RC America, 2030 Century Center Blvd #15
Irving, TX 75062
USA
Phone: (214) 744-2400
Fax: (214) 744-2401
Email: xray@rcamerica.com

FAILURE TO FOLLOW THESE INSTRUCTIONS WILL BE CONSIDERED AS ABUSE AND/OR NEGLECT.

SAFETY PRECAUTIONS

Contains:
LEAD (CAS 7439-92-1) ANTIMONY (CAS 7440-36-0)
WARNING: This product contains a chemical known to the state of California to cause cancer and birth defects or other reproductive harm.
CAUTION: CANCER HAZARD
Contains lead, a listed carcinogen. Lead is harmful if ingested. Wash thoroughly after using. DO NOT use product while eating, drinking or using tobacco products. May cause chronic effects to gastrointestinal tract, CNS, kidneys, and blood. MAY CAUSE BIRTH DEFECTS.

When building, using and/or operating this model always wear protective glasses and gloves.

Take appropriate safety precautions prior to operating this model. You are responsible for this model's assembly and safe operation! Please read the instruction manual before building and operating this model and follow all safety precautions. Always keep the instruction manual at hand for quick reference, even after completing the assembly. Use only genuine and original authentic XRAY parts for maximum performance. Using any third party parts on this model will void guaranty immediately.

Improper operation may cause personal and/or property damage. XRAY and its distributors have no control over damage resulting from shipping, improper construction, or improper usage. XRAY assumes and accepts no responsibility for personal and/or property damages resulting from the use of improper building materials, equipment and operations. By purchasing any item produced by XRAY, the buyer expressly warrants that he/she is in compliance with all applicable federal, state and local laws and regulation regarding the purchase, ownership and use of the item. The buyer expressly agrees to indemnify and hold harmless XRAY for all claims resulting directly or indirectly from the purchase, ownership or use of the product. By the act of assembling or operating this product, the user accepts all resulting liability. If the buyer is not prepared to accept this liability, then he/she should return this kit in new, unassembled, and unused condition to the place of purchase.

IMPORTANT NOTES – GENERAL

- This product is not suitable for children under 16 years of age without the direct supervision of a responsible and knowledgeable adult.
- Carefully read all manufacturers warnings and cautions for any parts used in the construction and use of your model.
- Assemble this kit only in places away from the reach of very small children.
- First-time builders and users should seek advice from people who have building experience in order to assemble the model correctly and to allow the model to reach its performance potential.
- Exercise care when using tools and sharp instruments.
- Take care when building, as some parts may have sharp edges.
- Keep small parts out of reach of small children. Children must not be allowed to put any parts in their mouth, or pull vinyl bag over their head.
- Read and follow instructions supplied with paints and/or cement, if used (not included in kit).
- Immediately after using your model, do NOT touch equipment on the model such as the motor and speed controller, because they generate high temperatures. You may seriously burn yourself seriously touching them.
- Follow the operating instructions for the radio equipment at all times.
- Do not put fingers or any objects inside rotating and moving parts, as this may cause damage or serious injury as your finger, hair, clothes, etc. may get caught.
- Be sure that your operating frequency is clear before turning on or running your model, and never share the same frequency with somebody else at the same time. Ensure that others are aware of the operating frequency you are using and when you are using it.
- Use a transmitter designed for ground use with RC cars. Make sure that no one else is using the same frequency as yours in your operating area. Using the same frequency at the same time, whether it is driving, flying or sailing, can cause loss of control of the RC model, resulting in a serious accident.
- Always turn on your transmitter before you turn on the receiver in the car. Always turn off the receiver before turning your transmitter off.
- Keep the wheels of the model off the ground when checking the operation of the radio equipment.
- Disconnect the battery pack before storing your model.
- When learning to operate your model, go to an area that has no obstacles that can damage your model if your model suffers a collision.
- Remove any sand, mud, dirt, grass or water before putting your model away.
- If the model behaves strangely, immediately stop the model, check and clear the problem.
- To prevent any serious personal injury and/or damage to property, be responsible when operating all remote controlled models.
- The model car is not intended for use on public places and roads or areas where its operation can conflict with or disrupt pedestrian or vehicular traffic.
- Because the model car is controlled by radio, it is subject to radio interference from many sources that are beyond your control. Since radio interference can cause momentary loss of control, always allow a safety margin in all directions around the model in order to prevent collisions.
- Do not use your model:
  - Near real cars, animals, or people that are unaware that an RC car is being driven.
  - In places where children and people gather
  - In residential districts and parks
  - In limited indoor spaces
  - In wet conditions
  - In the street
  - In areas where loud noises can disturb others, such as hospitals and residential areas.
  - At night or anytime your line of sight to the model may be obstructed or impaired in any way.

To prevent any serious personal injury and/or damage to property, please be responsible when operating all remote controlled models.

IMPORTANT NOTES – ELECTRICAL

- Insulate any exposed electrical wiring (using heat shrink tubing or electrical tape) to prevent dangerous short circuits. Take maximum care in wiring, connecting and insulating cables. Make sure cables are always connected securely. Check connectors for if they become loose. And if so, reconnect them securely. Never use R/C models with damaged wires. A damaged wire is extremely dangerous, and can cause short-circuits resulting in fire. Please have wires repaired at your local hobby shop.
- Low battery power will result in loss of control. Loss of control can occur due to a weak battery in either the transmitter or the receiver. Weak running battery may also result in an out of control car if your car's receiver power is supplied by the running battery. Stop operation immediately if the car starts to slow down.
- When not using RC model, always disconnect and remove battery.
- Do not disassemble battery or cut battery cables. If the running battery short-circuits, approximately 300W of electricity can be discharged, leading to fire or burns. Never disassemble battery or cut battery cables.
- Use a recommended charger for the receiver and transmitter batteries and follow the instructions correctly. Over-charging, incorrect charging, or using inferior chargers can cause the batteries to become dangerously hot. Recharge battery when necessary. Continual recharging may damage battery and, in the worst case, could build up heat leading to fire. If battery becomes extremely hot during recharging, please ask your local hobby shop for check and/or repair and/or replacement.
- Regularly check the charger for potential hazards such as damage to the cable, plug, casing or other defects. Ensure that any damage is rectified before using the charger again. Modifying the charger may cause short-circuit or overcharging leading to a serious accident. Therefore do not modify the charger.
- Always unplug charger when recharging is finished.
- Do not recharge battery while battery is still warm. After use, battery retains heat. Wait until it cools down before charging.
- Do not allow any metal part to short circuit the receiver batteries or other electrical/electronic device on the model.
- Immediately stop running if your RC model gets wet as may cause short circuit.
- Please dispose of batteries responsibly. Never put batteries into fire.

R/C & BUILDING TIPS

- Make sure all fasteners are properly tightened. Check them periodically.
- Make sure that chassis screws do not protrude from the chassis.
- For the best performance, it is very important that great care is taken to ensure the free movement of all parts.
- Clean all ball-bearings so they move very easily and freely.
- Tap or pre-thread the plastic parts when threading screws.
- Self-tapping screws cut threads into the parts when being tightened. Do not use excessive force when tightening the self-tapping screws because you may strip out the thread in the plastic. We recommended you stop tightening a screw when you feel some resistance.
- Ask your local hobby shop for any advice.

Please support your local hobby shop. We at XRAY Model Racing Cars support all local hobby dealers. Therefore we ask you, if at all possible, to purchase XRAY products at your hobby dealer and give them your support like we do. If you have difficulty finding XRAY products, please check out www.teamxray.com to get advice, or contact us via email at info@teamxray.com, or contact the XRAY distributor in your country.

WARRANTY

XRAY guarantees this model kit to be free from defects in both material and workmanship within 30 days of purchase. The total monetary value under warranty will in no case exceed the cost of the original kit purchased. This warranty does not cover any components damaged by use or modification or as a result of wear. Part or parts missing from this kit must be reported within 30 days of purchase. No part or parts will be sent under warranty without proof of purchase. Should you find a defective or missing part, contact the local distributor. Service and customer support will be provided through local hobby store where you have purchased the kit, therefore make sure to purchase any XRAY products at your local hobby store. This model racing car is considered to be a high-performance racing vehicle. As such this vehicle will be used in an extreme range of conditions and situations, all which may cause premature wear or failure of any component. XRAY has no control over usage of vehicles once they leave the dealer, therefore XRAY can only offer warranty against all manufacturer's defects in materials, workmanship, and assembly at point of sale and before use. No warranties are expressed or implied that cover damage caused by what is considered normal use, or cover or imply how long any model cars' components or electronic components will last before requiring replacement.

Due to the high performance level of this model car you will need to periodically maintain and replace consumable components. Any and all warranty coverage will not cover replacement of any part or component damaged by neglect, abuse, or improper or unreasonable use. This includes but is not limited to damage from crashing, chemical and/or water damage, excessive moisture, improper or no maintenance, or user modifications which compromise the integrity of components. Warranty will not cover components that are considered consumable on RC vehicles. XRAY does not pay nor refund shipping on any component sent to XRAY or its distributors for warranty. XRAY reserves the right to make the final determination of the warranty status of any component or part.

Limitations of Liability
XRAY makes no other warranties expressed or implied. XRAY shall not be liable for any loss, injury or damages, whether direct, indirect, special, incidental, or consequential, arising from the use, misuse, or abuse of this product and/or any product or accessory required to operate this product. In no case shall XRAY's liability excess the monetary value of this product.

Take adequate safety precautions prior to operating this model. You are responsible for this model's assembly and safe operation.

Disregard of the any of the above cautions may lead to accidents, personal injury, or property damage. XRAY MODEL RACING CARS assumes no responsibility for any injury, damage, or misuse of this product during assembly or operation, nor any addictions that may arise from the use of this product.

QUALITY CERTIFICATE

XRAY MODEL RACING CARS uses only the highest quality materials, the best compounds for molded parts and the most sophisticated manufacturing processes of TQM (Total Quality Management). We guarantee that all parts of a newly-purchased kit are manufactured with the highest regard to quality. However, due to the many factors inherent in model racecar competition, we cannot guarantee any parts once you start racing the car. Products which have been worn out, abused, neglected or improperly operated will not be covered under warranty.
We wish you enjoyment of this high-quality and high-performance RC car and wish you best success on the track!

In line with our policy of continuous product development, the exact specifications of the kit may vary. In the unlikely event of any problems with your new kit, you should contact the model shop where you purchased it, quoting the part number.

SYMBOLS USED

Part bags used	Assemble in the specified order	Assemble left and right sides the same way	Assemble front and rear the same way	Pay attention here	Assemble as many times as specified (here twice)	Apply instant glue	Apply oil	Apply grease	Apply threadlock
Cut off shaded portion	Use special tool	Cut off remaining material	Time	Use cleaner or WD-40®	Tighten screw gently	Ensure smooth non-binding movement	Use pliers	Follow tip here	Follow Set-up Book

TOOLS REQUIRED

- Phillips 5.0mm (HUDY TOOLS)
- Allen 1.5/2.0/2.5/3.0mm (HUDY TOOLS)
- Ball Allen 2.5mm (HUDY TOOLS)
- Arm Reamer 3mm/4mm (HUDY TOOLS)
- Socket 5.0/5.5mm (HUDY TOOLS)

Professional Multi Tool (HUDY #183011)

17mm Wheel Nut Tool (HUDY #107570)

Turnbuckle Wrench (HUDY #181040 4mm) (HUDY #181050 5mm)

Special Tool for all turnbuckles, nuts (HUDY #181090)

Cross Wrench (HUDY #107581)

Side Cutters (HUDY #189010)

Pocket Hobby Knife (HUDY #188981)

Needle Nose Pliers (HUDY #189020)

Snap Ring Pliers (HUDY #189040)

Scissors (HUDY #188990)

Body Reamer (HUDY #107600) or (HUDY #107601)

TOOLS & EQUIPMENT INCLUDED

Silicone Shock Oil (HUDY #106336 350cSt 100ml) (HUDY #106346 450cSt 100ml)

Silicone Diff Oil (HUDY #106431 3000cSt 100ml) (HUDY #106451 5000cSt 100ml) (HUDY #106471 7000cSt 100ml)

Graphite Grease (HUDY #106210)

NOT INCLUDED

SET-UP BOOK

To ensure that you always have access to the most up-to-date version of the XRAY Set-up Book, XRAY will now be offering only the digital online version at our website at www.teamxray.com. By offering this online version instead of including a hardcopy printed version in kits, you will always be assured of having the most current updated version.

EQUIPMENT REQUIRED

Transmitter

Receiver

Electric Motor

Pinion Gear

Speed Controller

LiPo Battery

Battery Charger

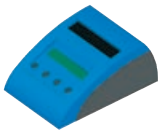

Steering Servo

Threadlock

CA Glue

Double-sided Tape (HUDY #107875)

Tires & Wheels

Lexan™ Paint

TIP FRONT & REAR DIFF GEAR MESH ADJUSTMENT

If there is too much or too little diff side play, this may create non-optimal gear mesh between the diff gear and the pinion drive gear. This is easily resolved by inserting 1 or 2 of the included thin shims behind a diff outdrive ball-bearing, depending on how much play there is.

THE LOCATION OF THE SHIM(S) DEPENDS ON WHETHER YOU ARE TRYING TO CLOSE OR OPEN THE GAP:

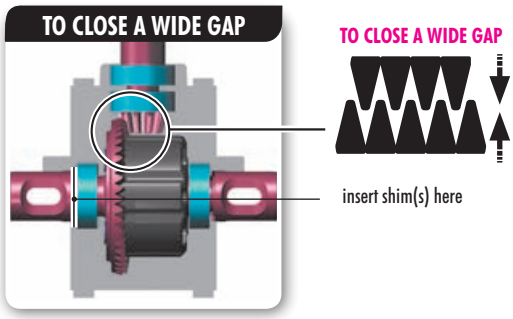

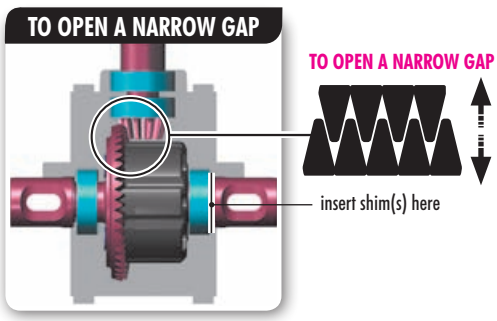

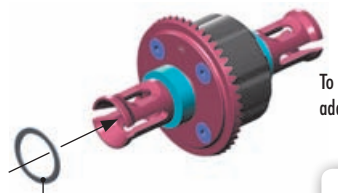

To CLOSE a wide gap:
add 1 or 2 shims against diff spur gear

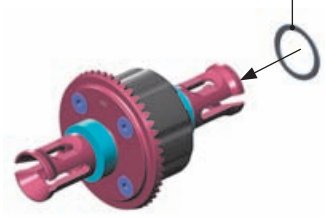

To OPEN a narrow gap:
add 1 or 2 shims on the other side of the diff, away from spur gear

SUSPENSION & DRIVETRAIN MAINTENANCE

- Check suspension for free movement during building and operation, and especially after running and if you have crashed the car. If the suspension does not move freely, use the appropriate HUDY Arm Reamer to clean and resize the holes of the suspension arms.
- Regularly check the drive shaft pins (both side and center) and if they show any wear must be immediately replaced by new pins. If the car is run with worn pins, excessive wear on the diff outdrives will result. The 106000 HUDY Drive Pin Replacement Tool (for 3mm Pins) is a compact, rugged multi-use tool set for replacing 3mm drive pins in drive shafts. Use the HUDY replacement drive shaft pins 3x14 (#106050).
- Regularly inspect and replace the connecting pins which connect the center drive shafts with the pinion gear, and also the pins that connect the wheel drive shafts with wheel axles. Use HUDY Graphite Grease to lubricate the drive shaft connecting joints and the diff gears.
- Pivot balls and ball-joints will naturally wear for some time and will generate play. If there is too much play the pivot balls and ball joints need to be replaced.
- If the car is run in wet conditions, apply WD-40® on all drivetrain parts before the run. After the run, clean and dry the parts again.

HUDY SPRING STEEL™

The HUDY Spring Steel™ used in the car is the strongest and most durable steel material on the RC market. While items made from HUDY Spring Steel™ are still subject to wear, the lifespan is considerably longer than any other material. As parts made from HUDY Spring Steel™ wear, the brown color will after some time "go down" but it will not affect the strength of the material. The brown color is only a surface treatment and if the brown color will wear the durability of the part will be still strong.

TIP DRIVE SHAFT PIN SERVICING

To enjoy the longest possible lifespan of the drive shafts and diff outdrives, it is extremely important to properly service the drive shaft pins.
Inspect the pins after every 3 hours of runtime. If the pins show any wear, replace them with new pins.

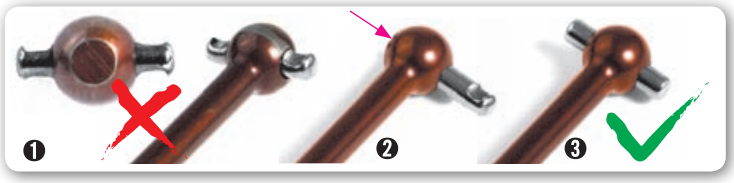

1. Do not use drive shafts when the pins are worn.
2. Press out the worn pins.
3. Press in new pins and regularly inspect for wear.

For easy drive pin replacements use #106000 HUDY Drive Pin Replacement Tool.

To replace the worn pins use only premium HUDY drive pins #106050.

1. FRONT & REAR DIFFERENTIALS

355065
REAR

940816

355022

964030

971061

355064
FRONT

355091

980261

355031

971061

355084

903312

964060

355031

940816

355065
REAR

355046

355064
FRONT

OPTION
#355022-G
DIFFERENTIAL CASE - V2 - GRAPHITE

OPTION
#355086
HEAT RESISTANT F/R ALU DIFF PIN
+ INSERTS (SET)

BAGS

01.1

2x

355004	XB8 FRONT DIFFERENTIAL 46T - V2 - SET	355091	F/R DIFF GASKET (4)
355005	XB8 REAR DIFFERENTIAL 46T - V2 - SET		
355022	DIFFERENTIAL CASE - V2	903312	HEX SCREW SFH M3x12 (10)
355031	STEEL DIFF BEVEL & SATELLITE GEARS - V2 (2+4)	940816	BALL-BEARING 8x16x5 RUBBER SEALED - GREASE (2)
355046	FRONT/REAR DIFF LARGE BEVEL GEAR 46T - HUDY STEEL	964030	WASHER S 3.5x12x0.2 (10)
355064	FRONT DIFF OUTDRIVE ADAPTER LONG - V2 - HUDY SPRING STEEL™ (2)	964060	WASHER S 6x18x0.2 (10)
355065	REAR DIFF OUTDRIVE ADAPTER - V2 - HUDY SPRING STEEL™ (2)	971061	SILICONE O-RING 6x1.55 (10)
355084	F/R DIFF PIN (2)	980261	PIN 2.5x11.5 (10)

940816
BB 8x16x5

964060
S 6x18x0.2

971061
O 6x1.55

980261
P 2.5x11.5

SET-UP BOOK
DIFFERENTIAL GEARS

2x F=R

Graphite Grease
(HUDY #106210)

Use HUDY Ball-Bearing Grease
#106220 - STANDARD
#106221 - BLUE
#106222 - RED

Graphite Grease
(HUDY #106210)

REAR

FRONT

Graphite Grease
(HUDY #106210)

TIP
IMPORTANT!
Use the same diff outdrives on both ends of a diff.

STEP ❺❻ DETAIL

DETAIL

2x F=R

TIP IMPORTANT!
Use the same diff outdrives on both ends of a diff.

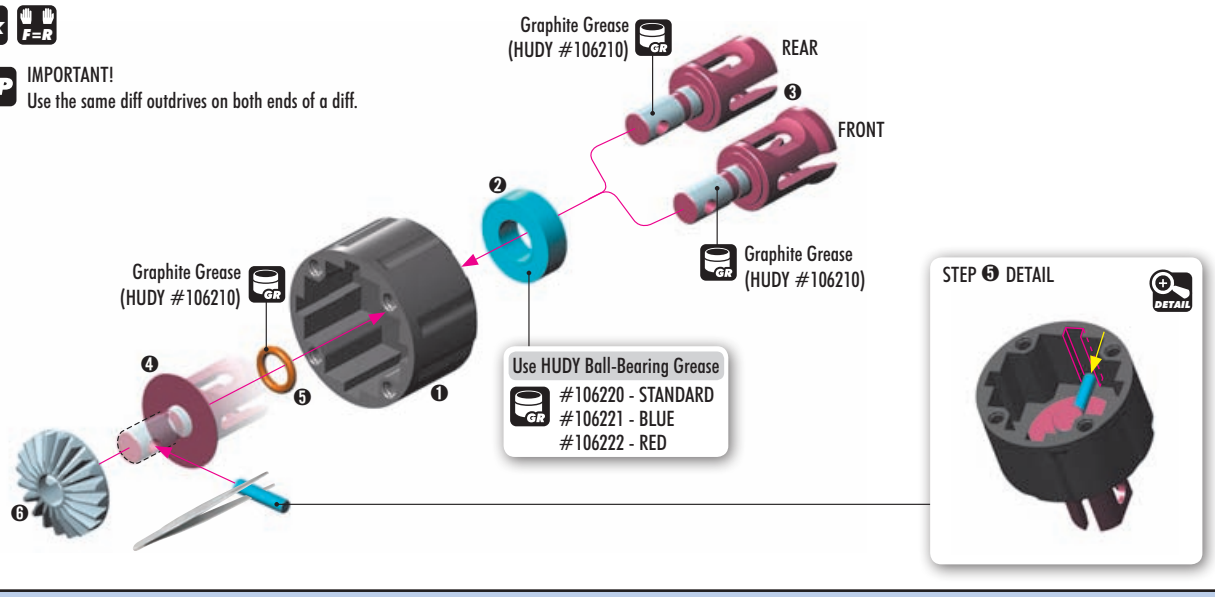

SET-UP BOOK
DIFFERENTIAL OIL

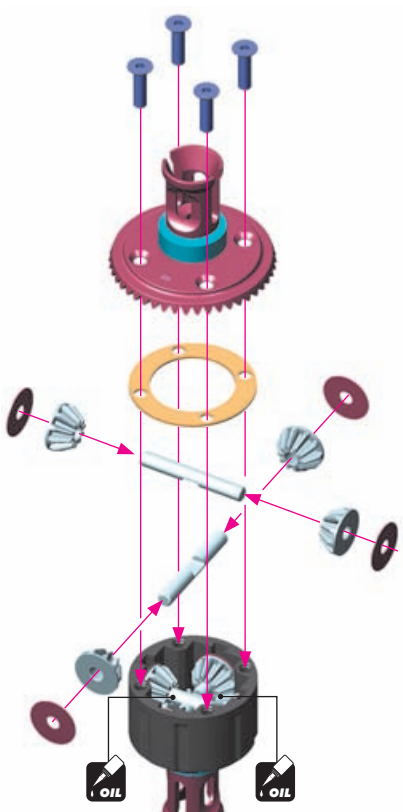

Front diff:
Silicone oil 6 000cSt
Fill just above the satellite gears.

Rear diff:
Silicone oil 3 000cSt
Fill just above the satellite gears.

VERY IMPORTANT!

Use the following silicone oils included in the kit for initial settings:
FRONT diff: 6 000cSt / REAR diff: 3 000cSt

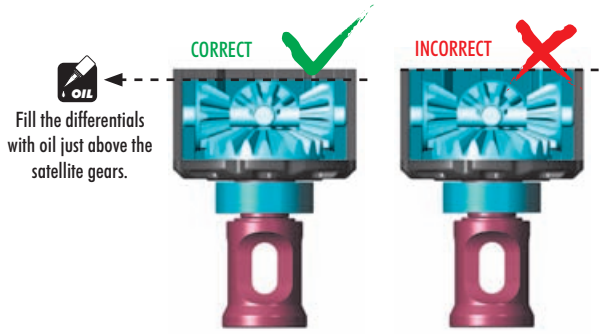

IMPORTANT!
Do not overfill the differential. If there is too much oil in the differential, it may leak after it cools down after use.

To ensure you have the same amount of oil from rebuild to rebuild, do the following:

#107865 HUDY Ultimate Digital Pocket Scale 300g±0.01g

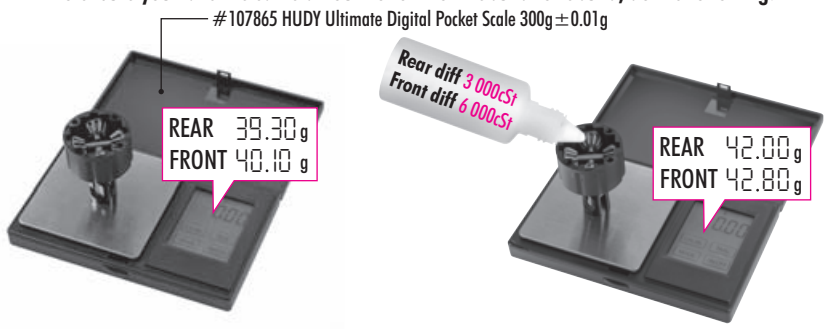

1. Put the diff (without oil) on the scale and check the weight:
- REAR DIFF approx. 39.30g
- FRONT DIFF approx. 40.10g

2. Slowly pour oil into the diff and watch the weight. Add 2.70g of oil into the diff. The approximate weight of the diff+oil is REAR DIFF approx. 42.00g and FRONT DIFF approx. 42.80g

OIL

REAR DIFF	39.30g +	2.70g	= 42.00g
FRONT DIFF	40.10g +	2.70g	= 42.80g

Tighten the screws equally

Finish tightening in this order

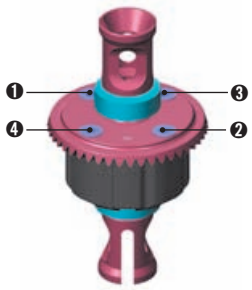

After assembly the differentials should have a length of 32.3~32.5 mm measured from the ends of the installed ball-bearings. If differentials are longer, retighten the 4 screws holding the crown gears.

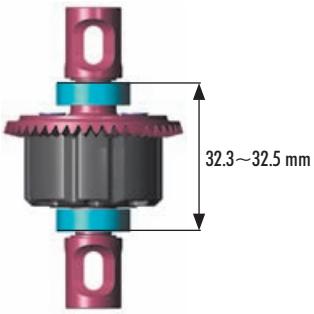

1. CENTER DIFFERENTIAL

OPTION

CENTER DIFF SPUR GEAR		
#355048	48T	OPTION
#355049	47T	OPTION
#355050	46T	INCLUDED
#355051	45T	OPTION
#355052	44T	OPTION

* CENTER DIFF SPUR GEAR - LARGE		
#355056	46T	OPTION
#355057	47T	OPTION
#355058	48T	OPTION

* must be used with #355013 CENTRAL DIFFERENTIAL - LARGE - SET

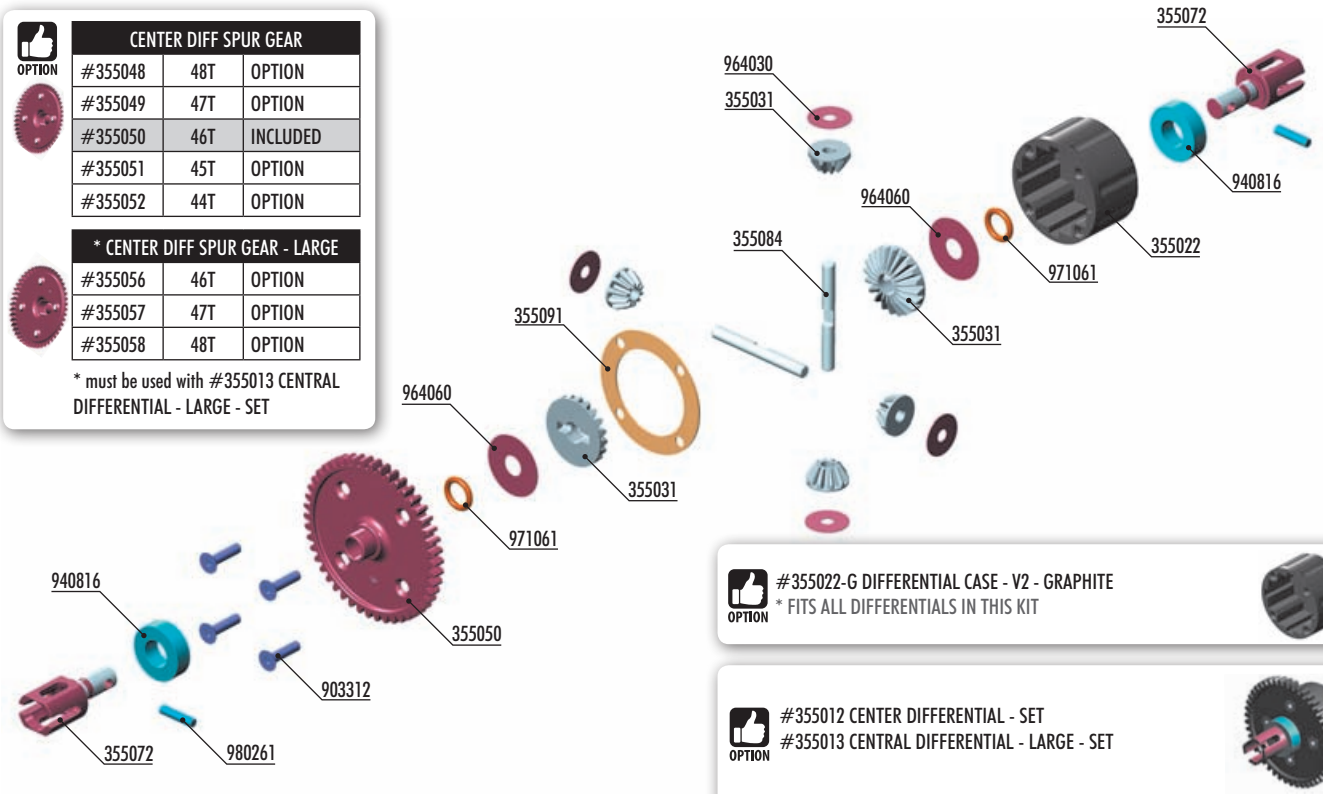

OPTION #355022-G DIFFERENTIAL CASE - V2 - GRAPHITE
* FITS ALL DIFFERENTIALS IN THIS KIT

OPTION #355012 CENTER DIFFERENTIAL - SET
#355013 CENTRAL DIFFERENTIAL - LARGE - SET

OPTION #355023-G CENTER DIFFERENTIAL CASE - V2 - GRAPHITE
* Must be used with #355013 CENTRAL DIFFERENTIAL - LARGE - SET

OPTION #355083 EXTREME HEAT RESISTANT CENTER DIFF PIN WITH INSERTS (2+4)
* Must be used with #355013 CENTRAL DIFFERENTIAL - LARGE - SET

BAG 01.3

355022	DIFFERENTIAL CASE - V2	903312	HEX SCREW SFH M3x12 (10)
355031	STEEL DIFF BEVEL & SATELLITE GEARS - V2 (2+4)	940816	BALL-BEARING 8x16x5 RUBBER SEALED - GREASE (2)
355050	CENTER DIFF SPUR GEAR 46T	964030	WASHER S 3.5x12x0.2 (10)
355072	LARGE CENTER DIFF OUTDRIVE ADAPTER - HUDY STEEL (2)	964060	WASHER S 6x18x0.2 (10)
355084	DIFF PIN (2)	971061	SILICONE O-RING 6x1.55 (10)
355091	DIFF GASKET (2)	980261	PIN 2.5x11.5 (10)

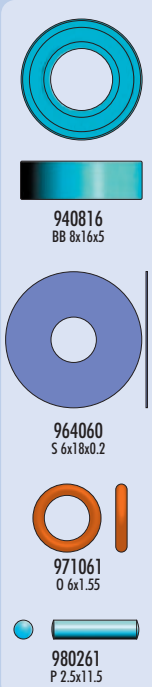

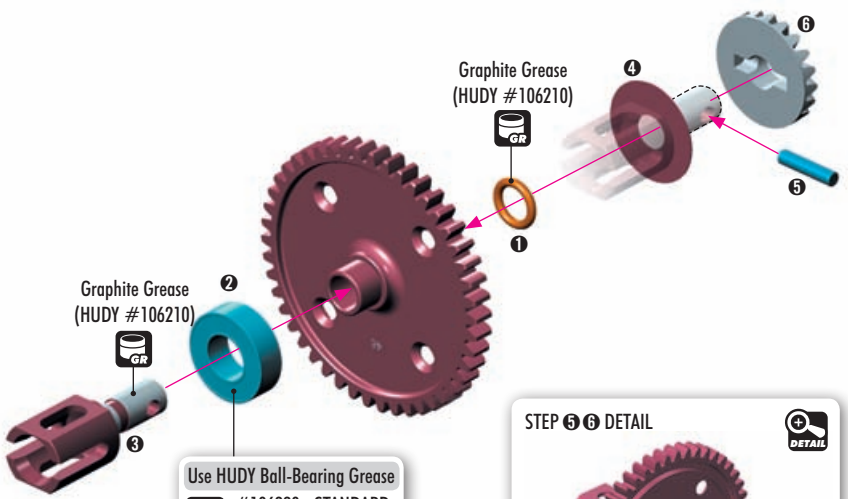

STEP ❺❻ DETAIL

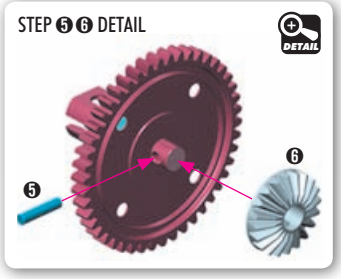

OPTION

CENTER DIFF SPUR GEAR		
#355048	48T	OPTION
#355049	47T	OPTION
#355050	46T	INCLUDED
#355051	45T	OPTION
#355052	44T	OPTION

* CENTER DIFF SPUR GEAR - LARGE		
#355056	46T	OPTION
#355057	47T	OPTION
#355058	48T	OPTION

* must be used with #355013 CENTRAL DIFFERENTIAL - LARGE - SET

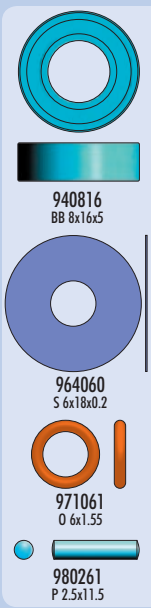

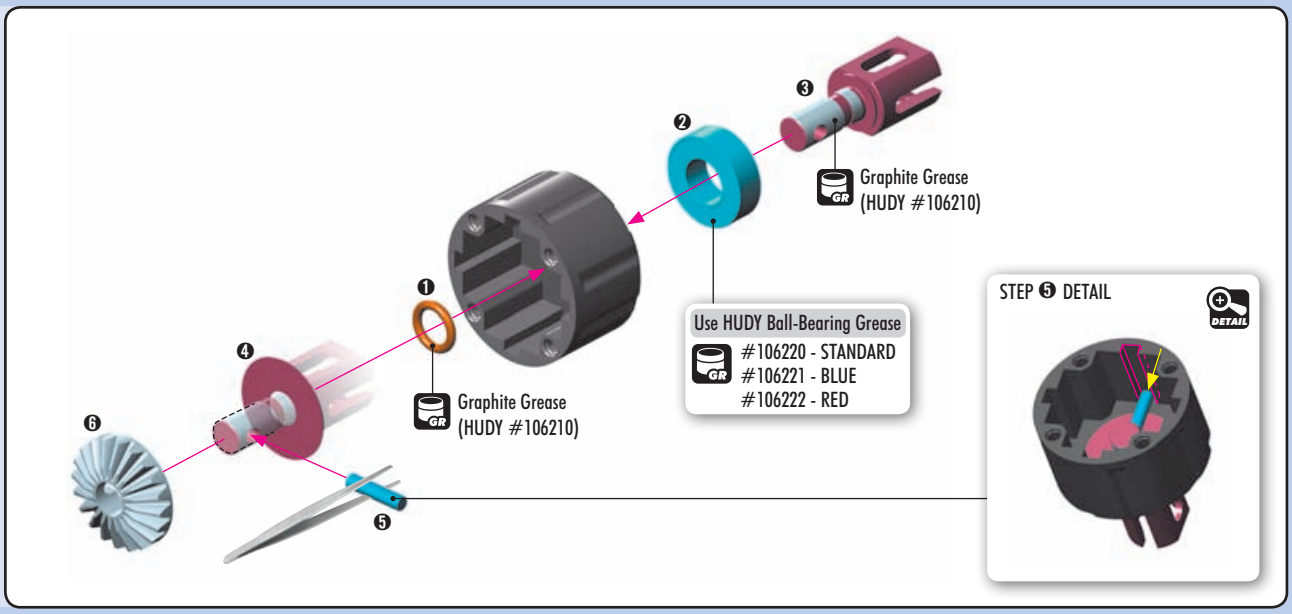

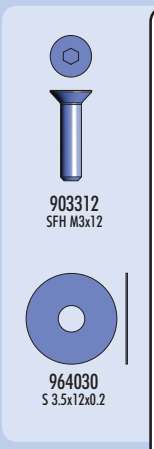

VERY IMPORTANT!

Use the following silicone oil included in the kit for initial setting:
Center diff: 7 000cSt

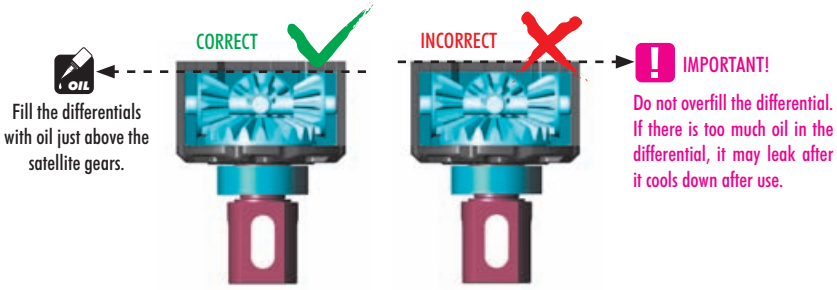

To ensure you have the same amount of oil from rebuild to rebuild, do the following:

#107865 HUDY Ultimate Digital Pocket Scale 300g±0.01g

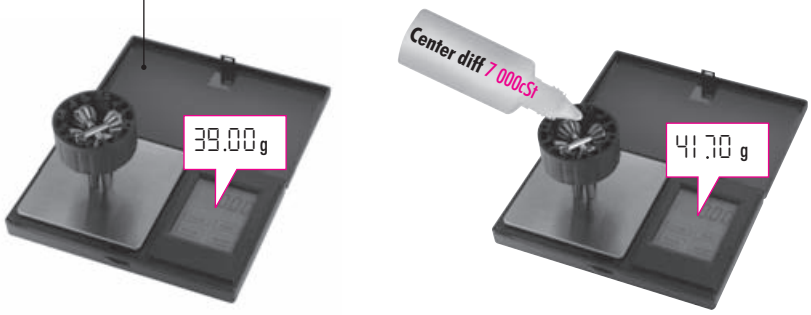

1. Put the diff (without oil) on the scale and check the weight (approximately 39g).

2. Slowly pour oil into the diff and watch the weight. Add 2.70g of oil into the diff. The approximate weight of the diff+oil is 41.70g.

OIL

CENTER DIFF 39.00g + 2.70g = 41.70g

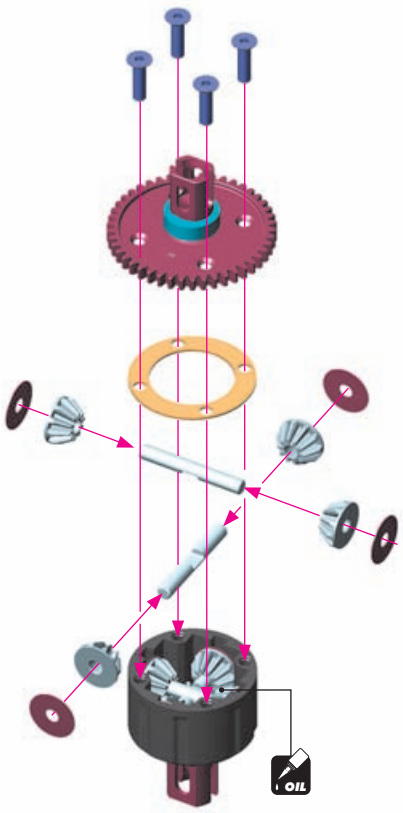

Center diff:
Silicone oil 7 000cSt
Fill to just above the satellite gears.

SET-UP BOOK
DIFFERENTIAL OIL

Tighten the screws equally

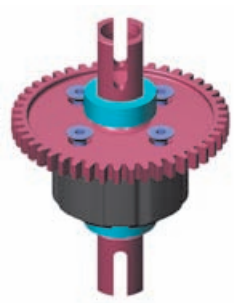

Finish tightening in this order

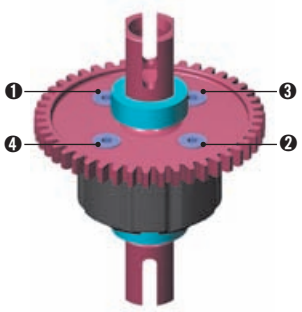

After assembly the differential should have a length of 32.3~32.5 mm measured from the ends of the installed ball-bearings. If differential is longer, retighten the 4 screws holding the spur gear.

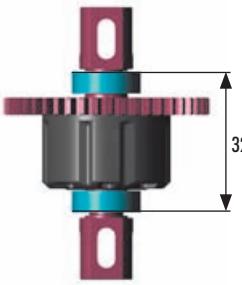

2. FRONT TRANSMISSION

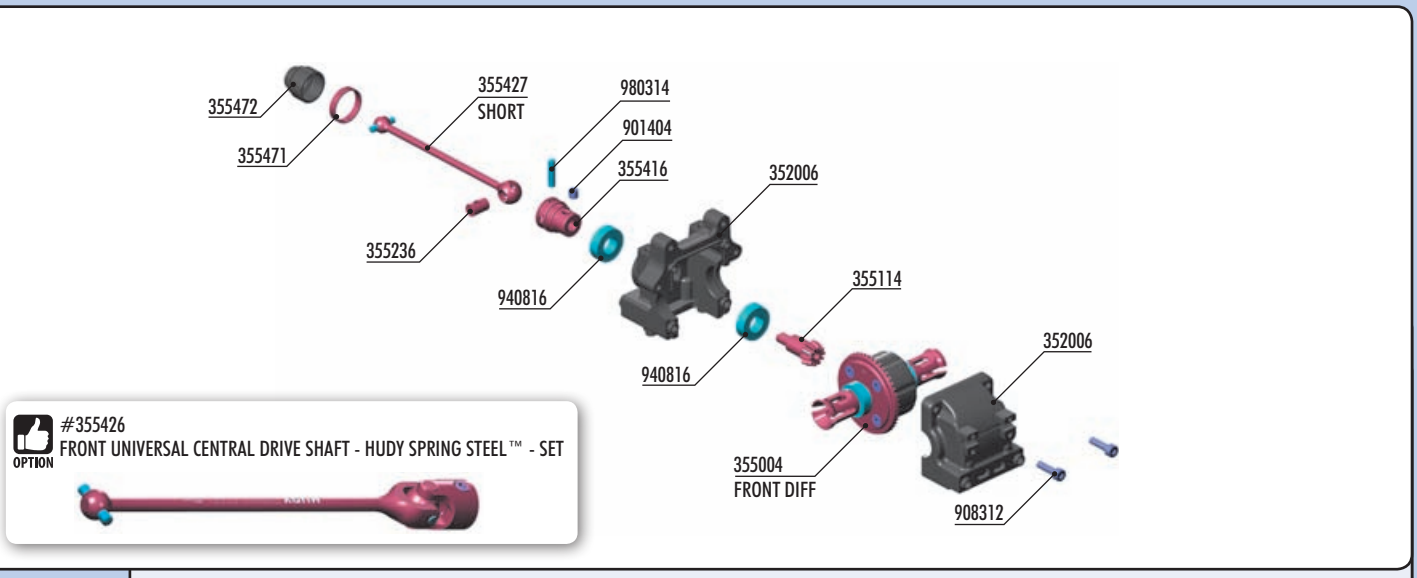

BAG 02

352006	XB8 DIFF BULKHEAD BLOCK SET FRONT/REAR	355472	DRIVE SHAFT BOOT (2)
355004	XB8 FRONT DIFFERENTIAL 46T - V2 - SET		
355114	BEVEL DRIVE GEAR 14T	901404	HEX SCREW SB M4x4 (10)
355236	CVD DRIVE SHAFT COUPLING - HUDY SPRING STEEL™	908312	HEX SCREW SOCKET HEAD CAP SCH M3x12 (10)
355416	CENTRAL CVD SHAFT UNIVERSAL JOINT - HUDY SPRING STEEL™	940816	BALL-BEARING 8x16x5 RUBBER SEALED - GREASE (2)
355427	FRONT CENTRAL CVD DRIVE SHAFT - HUDY SPRING STEEL™	980314	PIN 3x14 (10)
355471	DRIVE SHAFT LOCKING RING (2)		

901404
SB M4x4

940816
BB 8x16x5

980314
P 3x14

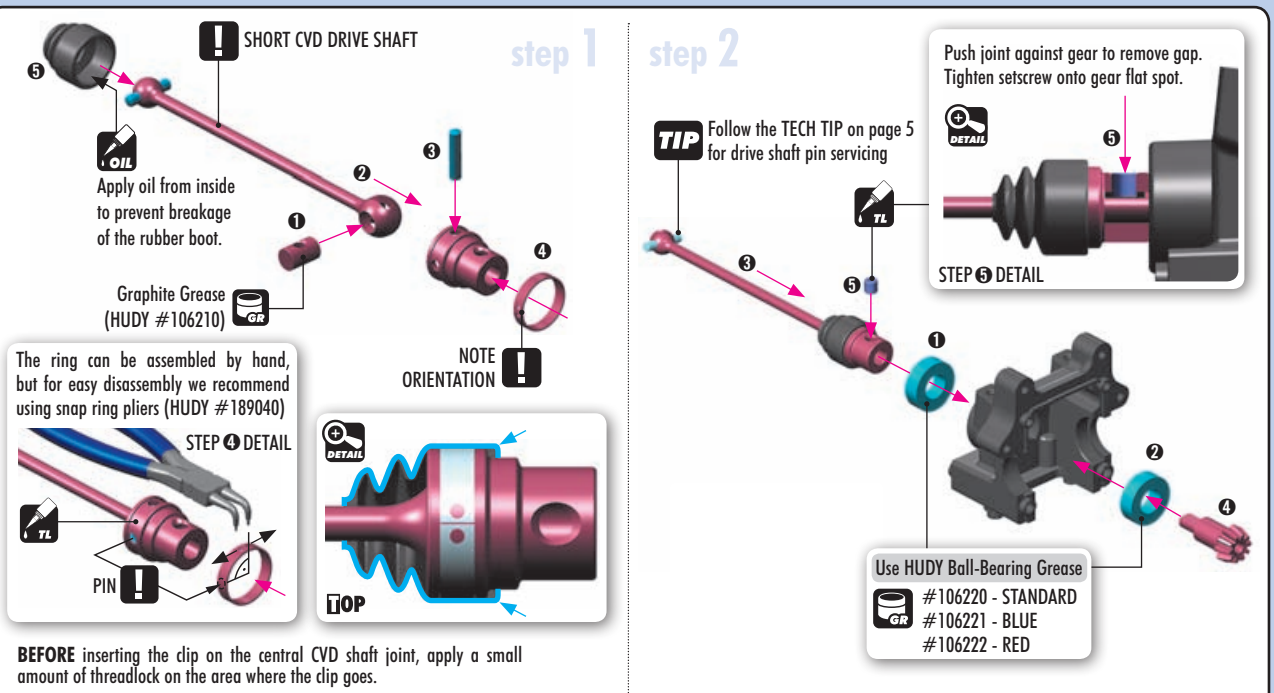

BEFORE inserting the clip on the central CVD shaft joint, apply a small amount of threadlock on the area where the clip goes.

AFTER inserting the clip on the central CVD shaft joint, turn the clip so that the slot is 90°from the pin. This will prevent the pin from opening the clip.

908312
SCH M3x12

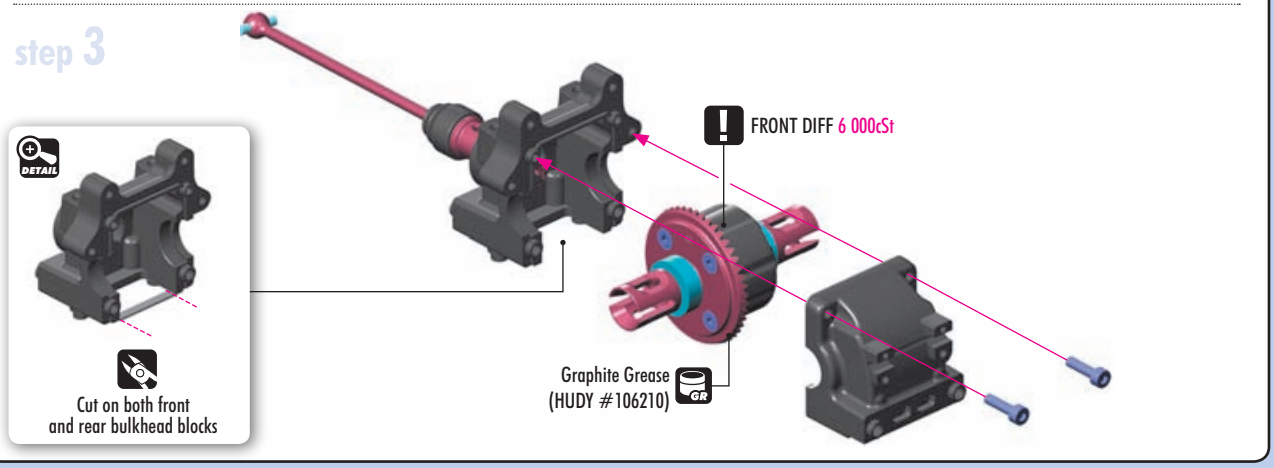

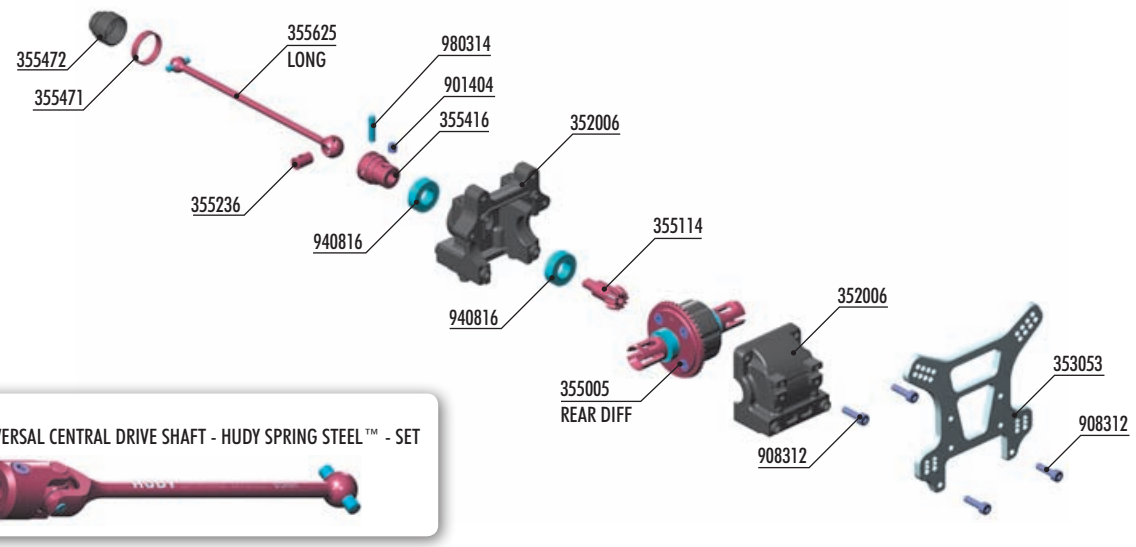

OPTION
#355626
REAR UNIVERSAL CENTRAL DRIVE SHAFT - HUDY SPRING STEEL™ - SET

BAG 02

352006	XB8 DIFF BULKHEAD BLOCK SET FRONT/REAR	355471	DRIVE SHAFT LOCKING RING (2)
355005	XB8 REAR DIFFERENTIAL 46T - V2 - SET	355472	DRIVE SHAFT BOOT (2)
353053	XB8 ALU REAR SHOCK TOWER - CNC MACHINED 7075 T6 (4MM)		
355114	BEVEL DRIVE GEAR 14T	901404	HEX SCREW SB M4x4 (10)
355236	CVD DRIVE SHAFT COUPLING - HUDY SPRING STEEL™	908312	HEX SCREW SOCKET HEAD CAP SCH M3x12 (10)
355416	CENTRAL CVD SHAFT UNIVERSAL JOINT - HUDY SPRING STEEL™	940816	BALL-BEARING 8x16x5 RUBBER SEALED - GREASE (2)
355625	REAR CENTRAL CVD DRIVE SHAFT - HUDY SPRING STEEL™	980314	PIN 3x14 (10)

901404
SB M4x4

940816
BB 8x16x5

980314
P 3x14

908312
SCH M3x12

step 1

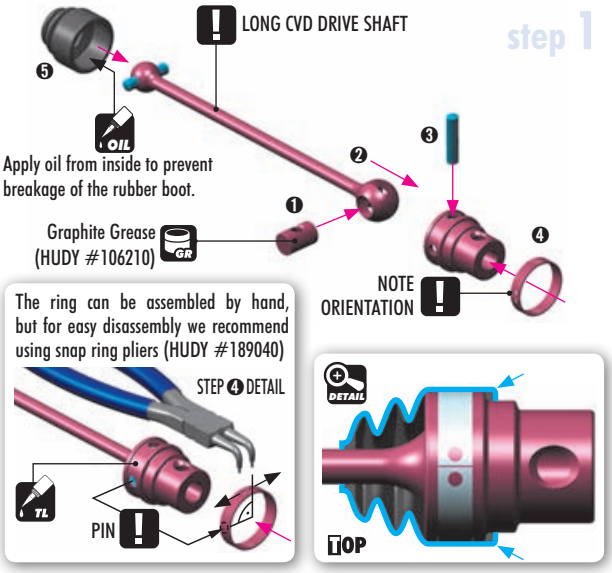

BEFORE inserting the clip on the central CVD shaft joint, apply a small amount of threadlock on the area where the clip goes.

AFTER inserting the clip on the central CVD shaft joint, turn the clip so that the slot is 90°from the pin. This will prevent the pin from opening the clip.

step 2

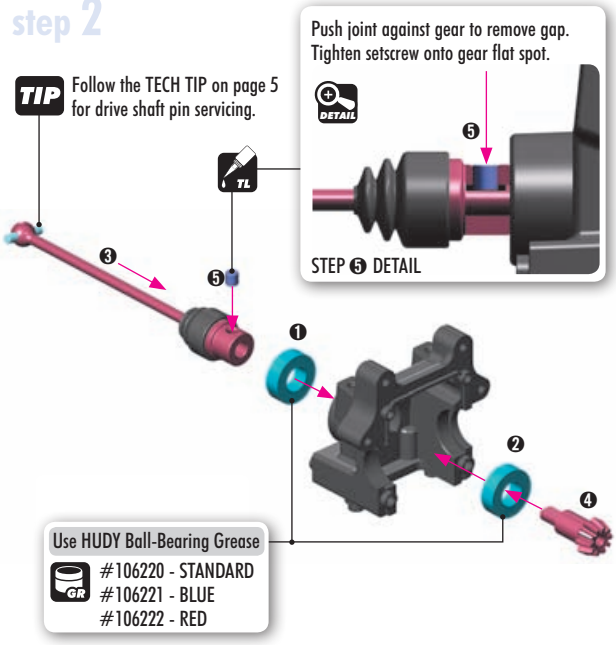

step 3

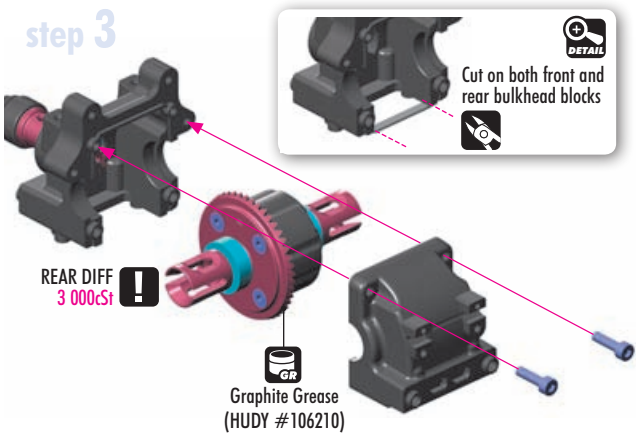

step 4

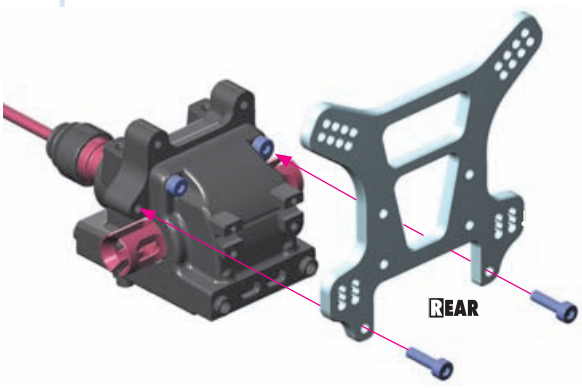

3. REAR SUSPENSION

OPTION

#353113 XB8'16 COMPOSITE REAR LOWER SUSPENSION ARM - RIGHT
#353123 XB8'16 COMPOSITE REAR LOWER SUSPENSION ARM - LEFT
#353317 XB8 ALU REAR LOWER SUSP. HOLDER - FRONT - SQUARE ADJ. ROLL CENTER
#353325 XB8 ALU REAR LOWER SUSP. HOLDER - REAR - SQUARE ADJ. ROLL CENTER

OPTION

REAR SUSPENSION ARMS		
#353115	MEDIUM	OPTION
#353116	HARD	OPTION
#353116-XH	X-HARD	INCLUDED
#353116-G	GRAPHITE	OPTION

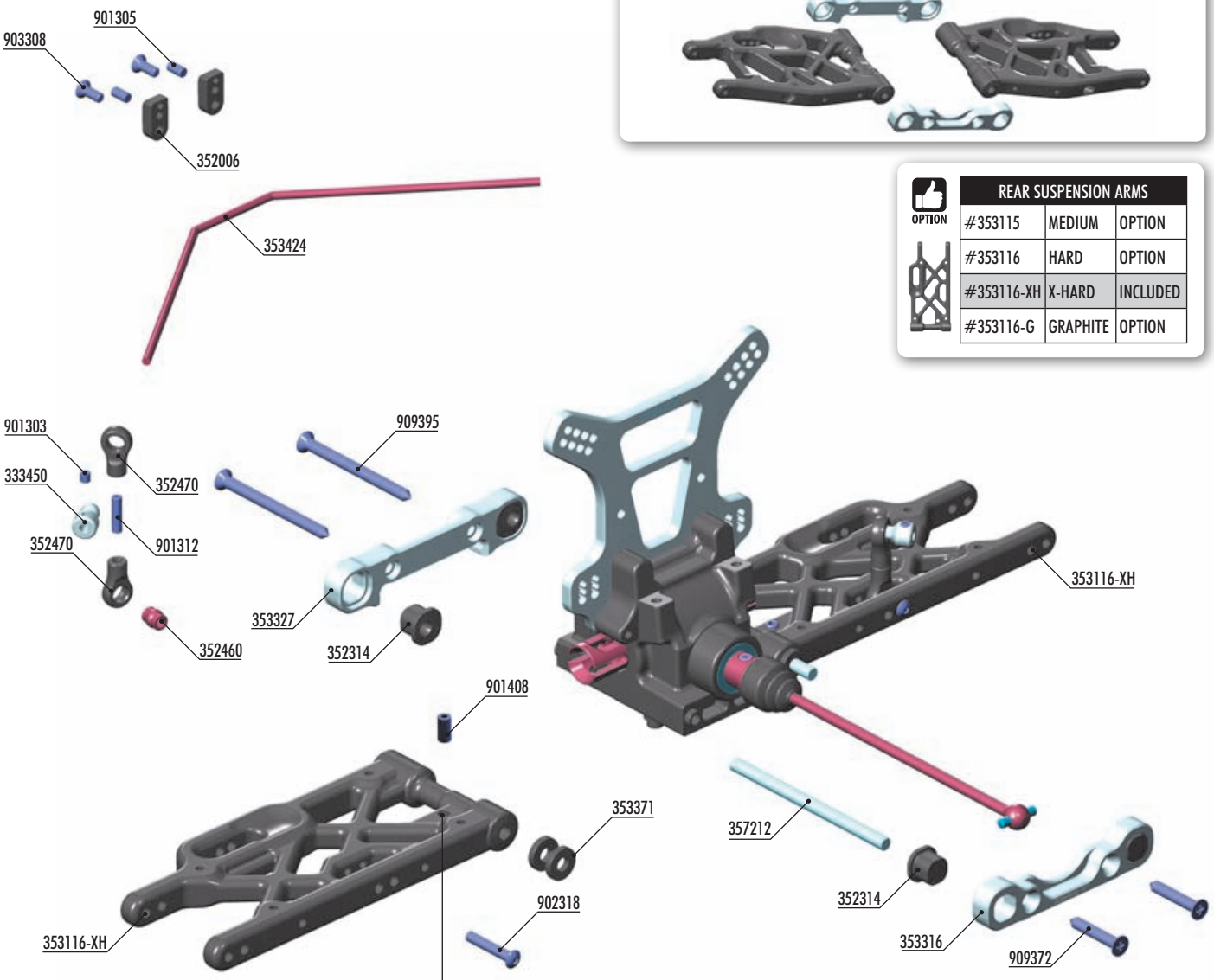

OPTION

#902407
HEX SCREW SH M4x7 WITH HEX FROM BOTTOM (4)

OPTION

#333451
ALU ANTI-ROLL BAR PIVOT BALL 5.8 MM - SWISS 7075 T6 - HARDCOATED (2)

OPTION

REAR ANTI-ROLL BARS		
#353418	ø1.8mm	OPTION
#353420	ø2.0mm	OPTION
#353422	ø2.2mm	OPTION
#353424	ø2.4mm	INCLUDED
#353425	ø2.5mm	OPTION
#353426	ø2.6mm	OPTION
#353428	ø2.8mm	OPTION
#353430	ø3.0mm	OPTION
#353432	ø3.2mm	OPTION

BAG 03

333450	ANTI-ROLL BAR BALL JOINT 5.8 MM (2)
352006	XB8 DIFF BULKHEAD BLOCK SET FRONT/REAR
352314	COMPOSITE ECCENTRIC BUSHINGS - V2 (2)
352460	PIVOT BALL 5.8 (10)
352470	BALL JOINT 5.8 (8)
353116-XH	COMPOSITE REAR LOWER SUSPENSION ARM - X-HARD
353316	ALU REAR LOWER SUSP. HOLDER - FRONT - SQUARE ADJ. ROLL CENTER
353327	ALU REAR LOWER SUSP. HOLDER - REAR - SQUARE ADJ. ROLL CENTER
353371	SET OF COMPOSITE LOWER ARM SHIMS
353424	REAR ANTI-ROLL BAR 2.4MM
357212	LOWER INNER PIVOT PIN F+R (2)
901303	HEX SCREW SB M3x3 (10)
901305	HEX SCREW SB M3x5 (10)
901312	HEX SCREW SB M3x12 (10)
901408	HEX SCREW SB M4x8 (10)
902318	HEX SCREW SH M3x18 (10)
903308	HEX SCREW SFH M3x8 (10))
909372	SCREW PHILLIPS SS 3.5x22 (10)
909395	SCREW PHILLIPS SS 3.5x45 (10)


353371
SHIM 4x10x2


901408
SB M4x8


909372
SS 3.5x22


909395
SS 3.5x45

OPTION

REAR SUSPENSION ARMS		
#353115	MEDIUM	OPTION
#353116	HARD	OPTION
#353116-XH	X-HARD	INCLUDED
#353116-G	GRAPHITE	OPTION

MEDIUM SUSPENSION ARMS

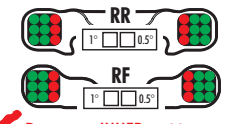

Do not use INNER positions.

HARD/X-HARD SUSPENSION ARMS

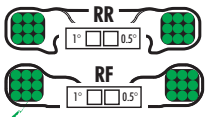

All positions are available.

GRAPHITE SUSPENSION ARMS

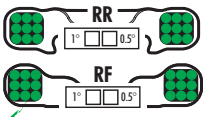

All positions are available.

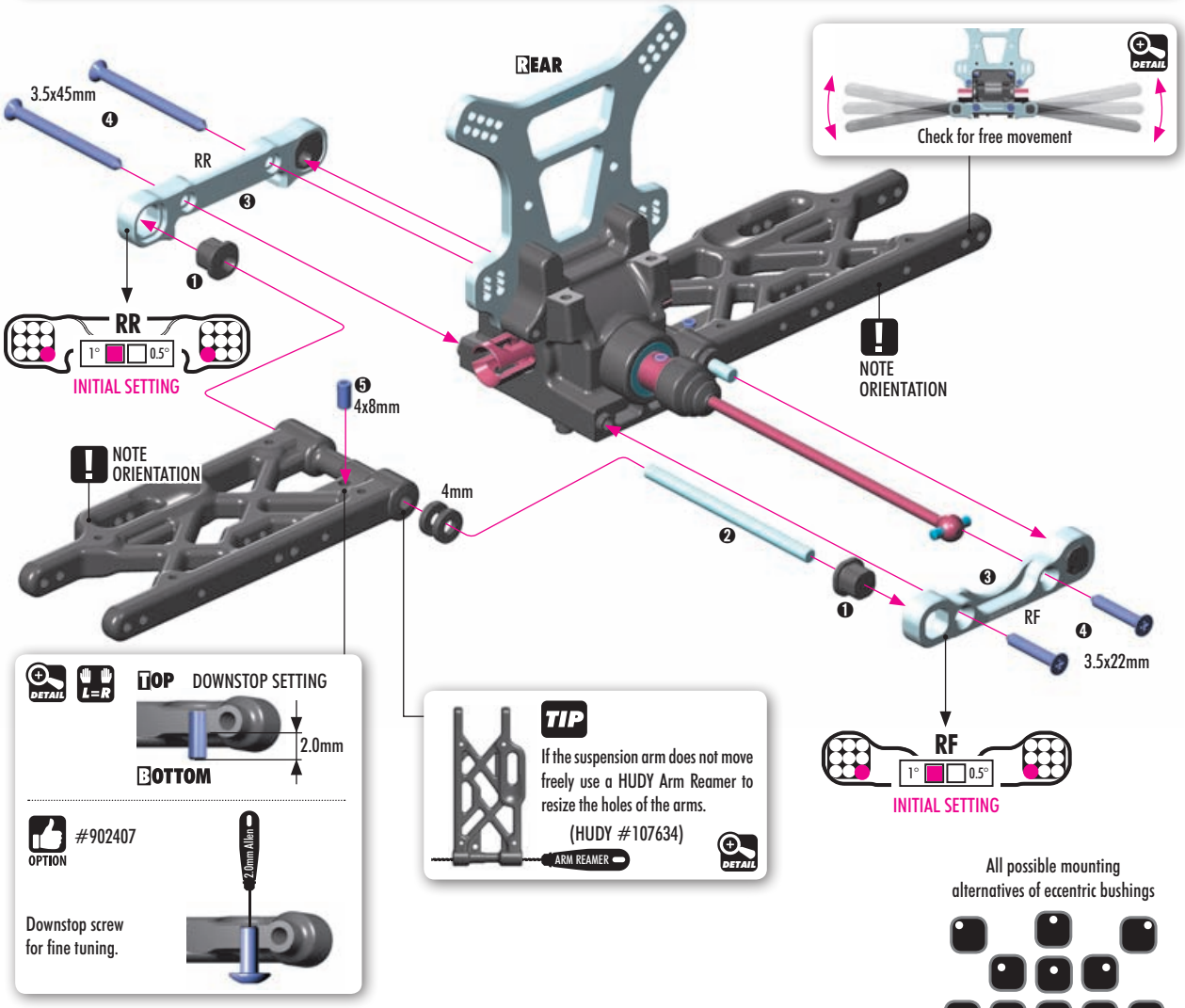

All possible mounting alternatives of eccentric bushings

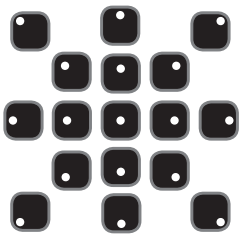

ECCENTRIC BUSHINGS HAVE TWO DIFFERENT OFFSETS FROM THE CENTER.


Middle position = 0.5 mm or 0.5° from center


Outer position = 1mm or 1° from center

SET-UP BOOK

TOE-IN
ANTI-SQUAT
ROLL CENTER DOWNSTOP
WHEELBASE
TRACK WIDTH

The XRAY rear alu lower suspension holders provide even greater range of adjustment for the rear suspension. Using different combinations of eccentric bushings, fine adjustment of rear anti-squat, rear toe-in, rear roll center, and rear track-width can be obtained. For more information about the influence of rear anti-squat, rear toe-in, rear roll center and rear track width on car handling, please refer to HUDY Off-Road Set-up Book (#209099).

ANTI-SQUAT

RR	RF	(°)
		=3°
		=4°
		=2°
		=4°
		=3°
		=5°
		=2°
		=3°
		=1°

ROLL CENTER

RR	RF	(mm)
		=0mm
		=1mm
		=-1mm

TRACK-WIDTH

RR	RF	(mm)
		=308
		=306
		=310

The tables describe the amounts of rear anti-squat, rear toe-in, rear track-width change depending on the combinations of eccentric bushings used with 0 and 1mm, 1° offset. The 0.5mm, 0.5° represents the half change.

Anti-Squat Example:

0(RR) - 0 (RF) = 3°

0(RR) - 0.5 (RF) = 3.5°

0(RR) - 1 (RF) = 4°

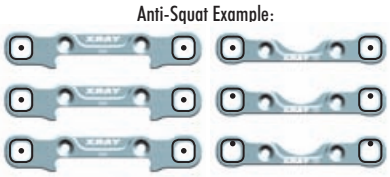

TOE-IN

RR	RF	(°)
		=3°
		=4°
		=2°
		=2°
		=3°
		=1°
		=4°
		=5°
		=3°

3. REAR SUSPENSION

901312
SB M3x12

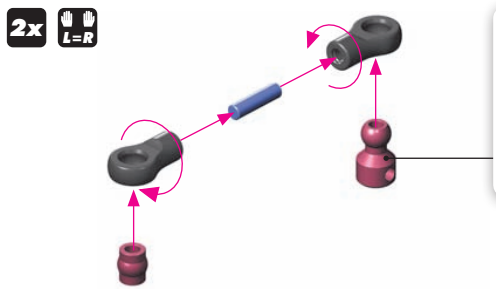

TIP Install the pivot balls with Professional Multi Tool (HUDY #183011)

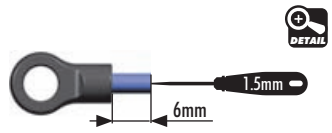

901303
SB M3x3

901305
SB M3x5

902318
SH M3x18

903308
SFH M3x8

SET-UP BOOK
ANTI-ROLL BAR

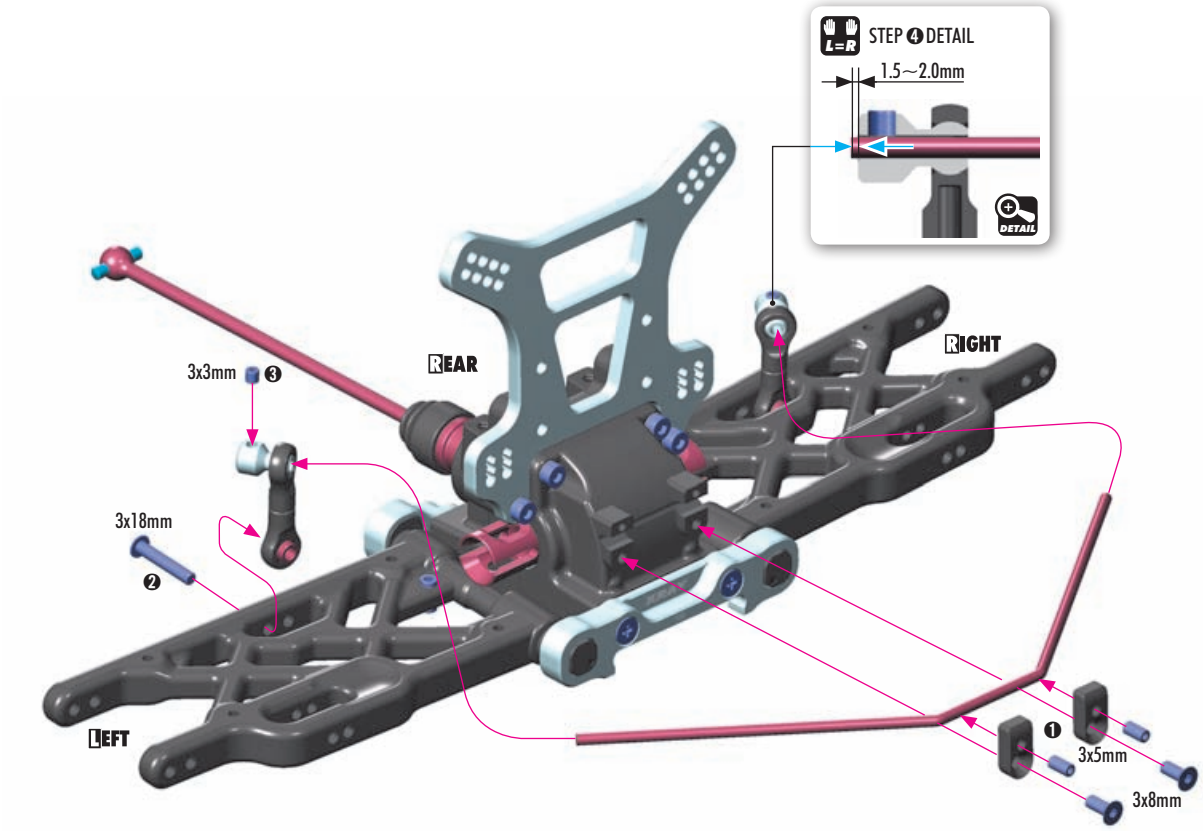

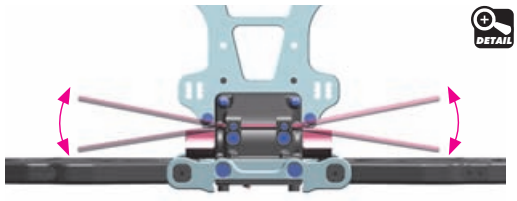

Step ❶ check for free movement

Loosen the 3x5 setscrew if the anti-roll bar does not turn freely

OPTION

REAR ANTI-ROLL BARS		
#353418	ø1.8mm	OPTION
#353420	ø2.0mm	OPTION
#353422	ø2.2mm	OPTION
#353424	ø2.4mm	INCLUDED
#353425	ø2.5mm	OPTION
#353426	ø2.6mm	OPTION
#353428	ø2.8mm	OPTION
#353430	ø3.0mm	OPTION
#353432	ø3.2mm	OPTION

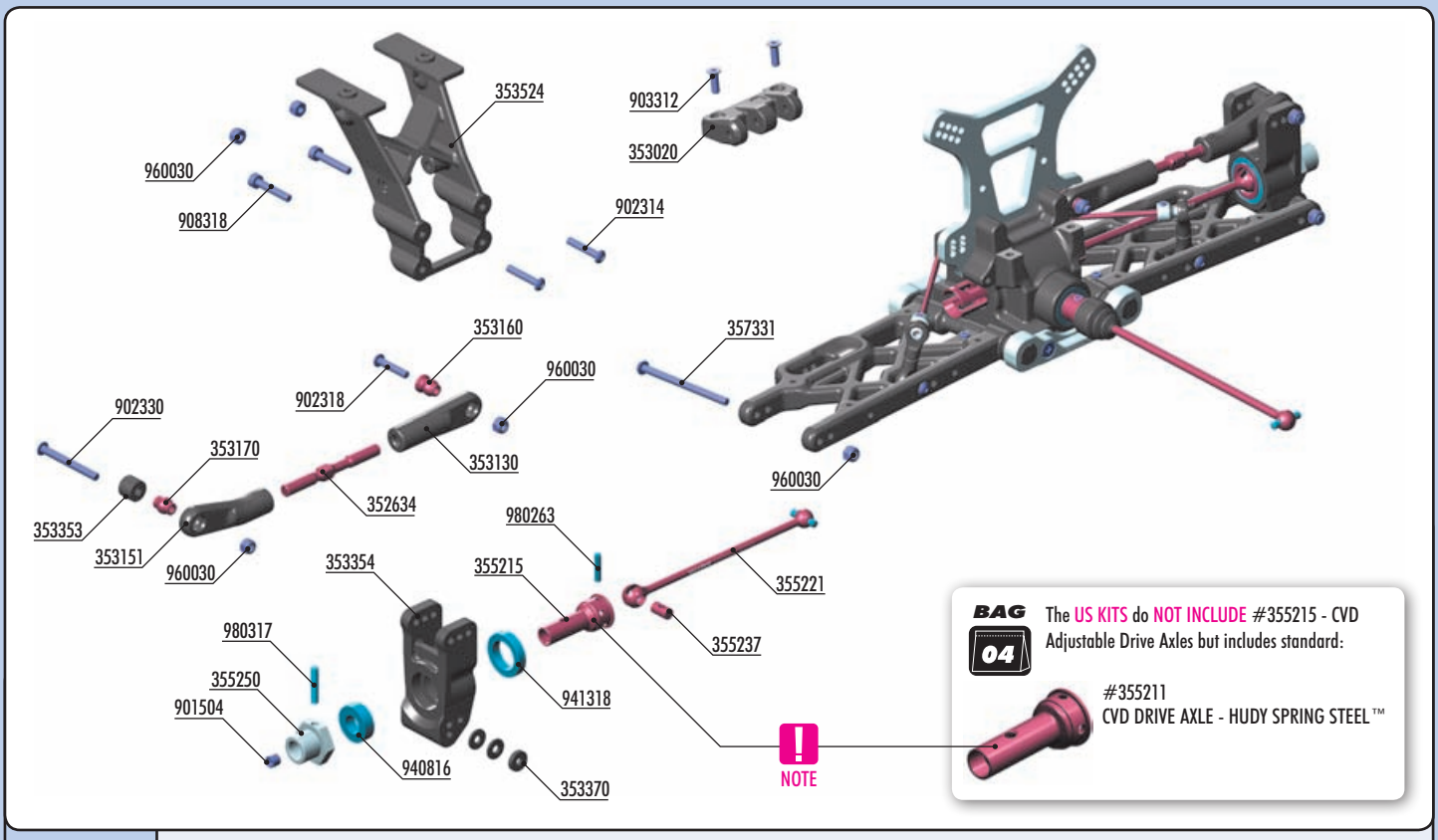

BAG 04

352634	ADJ. TURNBUCKLE M5 L/R 50 MM - HUDY SPRING STEEL™ (2)	357331	REAR LOWER OUTER PIVOT PIN SCREW 3MM (2)
353020	COMPOSITE REAR BRACE HOLDER		
353130	REAR UPPER INNER CAMBER LINK BALL JOINT (2)	901504	HEX SCREW SB M5x4 (10)
353151	RELIEF REAR UPPER OUTER CAMBER LINK BALL JOINT (2)	902314	HEX SCREW SH M3x14 (10)
353160	MOUNTING BALL 6.8 (4)	902318	HEX SCREW SH M3x18 (10)
353170	PIVOT BALL 6.8 (4)	902330	HEX SCREW SH M3x30 (10)
353354	COMPOSITE REAR UPRIGHT	903312	HEX SCREW SFH M3x12 (10)
353370	SET OF COMPOSITE REAR HUB CARRIER SHIMS	908318	HEX SCREW SOCKET HEAD CAP SCH M3x18 (10)
353524	COMPOSITE REAR WING HOLDER	940816	BALL-BEARING 8x16x5 RUBBER SEALED - GREASE (2)
355215	CVD ADJUSTABLE DRIVE AXLE - HUDY SPRING STEEL™	941318	BALL-BEARING 13x19x4 RUBBER SEALED - GREASE (2)
355221	CVD UNIVERSAL DRIVE SHAFT - HUDY SPRING STEEL™	960030	NUT M3 (10)
355237	CVD DRIVE SHAFT COUPLING - HUDY SPRING STEEL™	980263	PIN 2.5x13 (10)
355250	ALU WHEEL AXLE - BLACK COATED (2)	980317	PIN 3x17 (10)

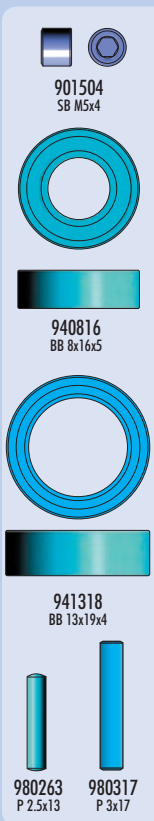

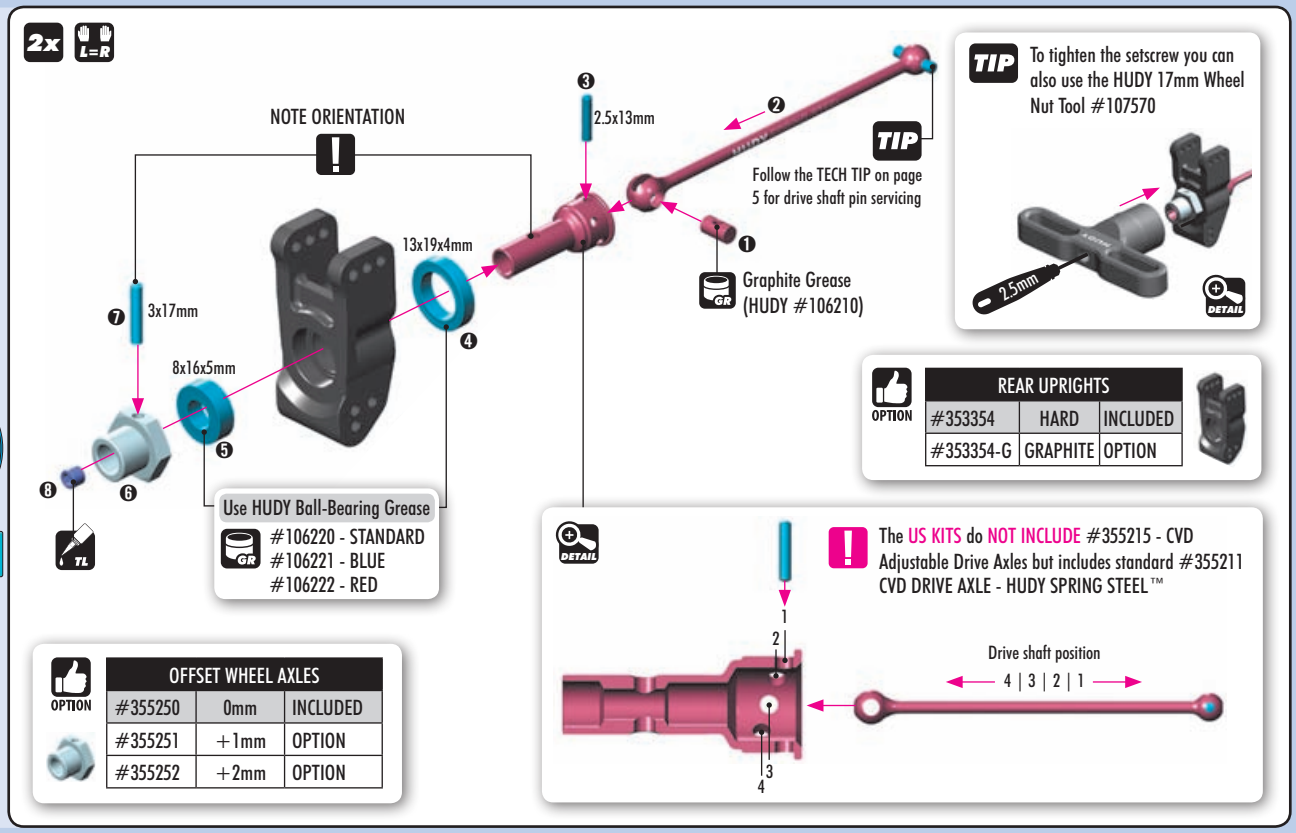

4. REAR SUSPENSION


353370
SHIM 3x9x1


353370
SHIM 3x9x2


960030
N M3

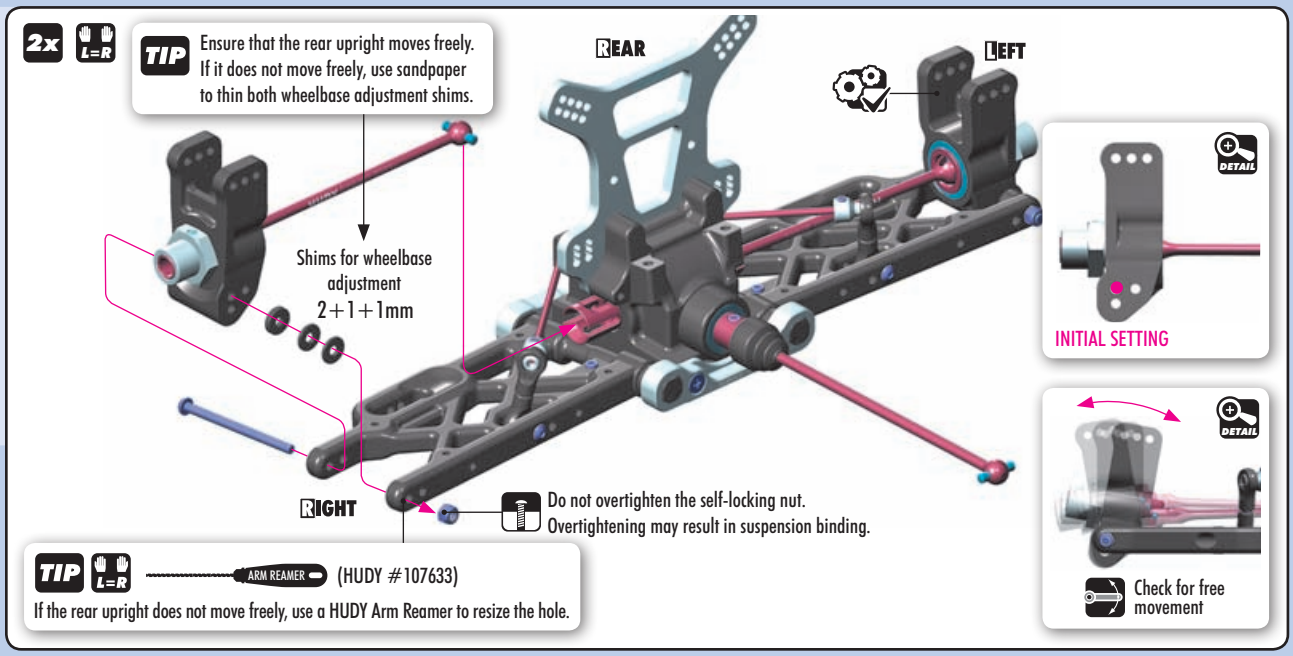

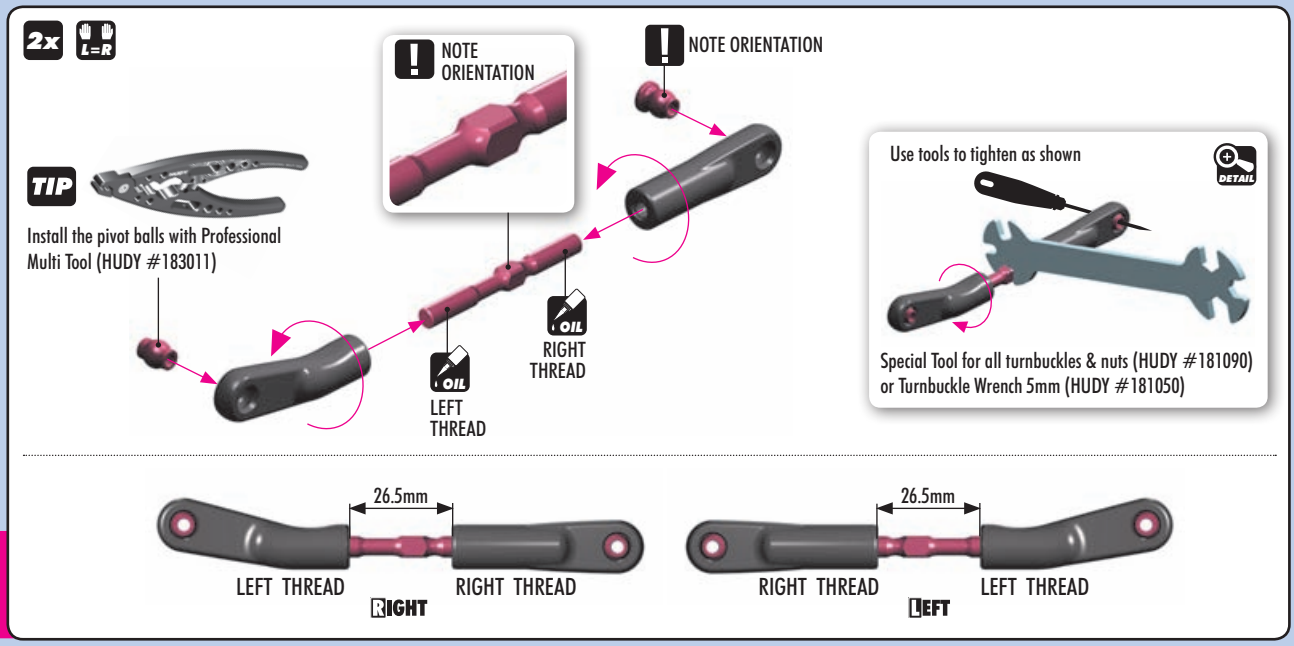

SET-UP BOOK
CAMBER


353353
SHIM 3x9x7

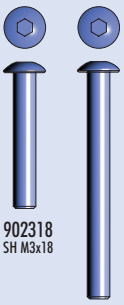
902318
SH M3x18

902330
SH M3x30


960030
N M3

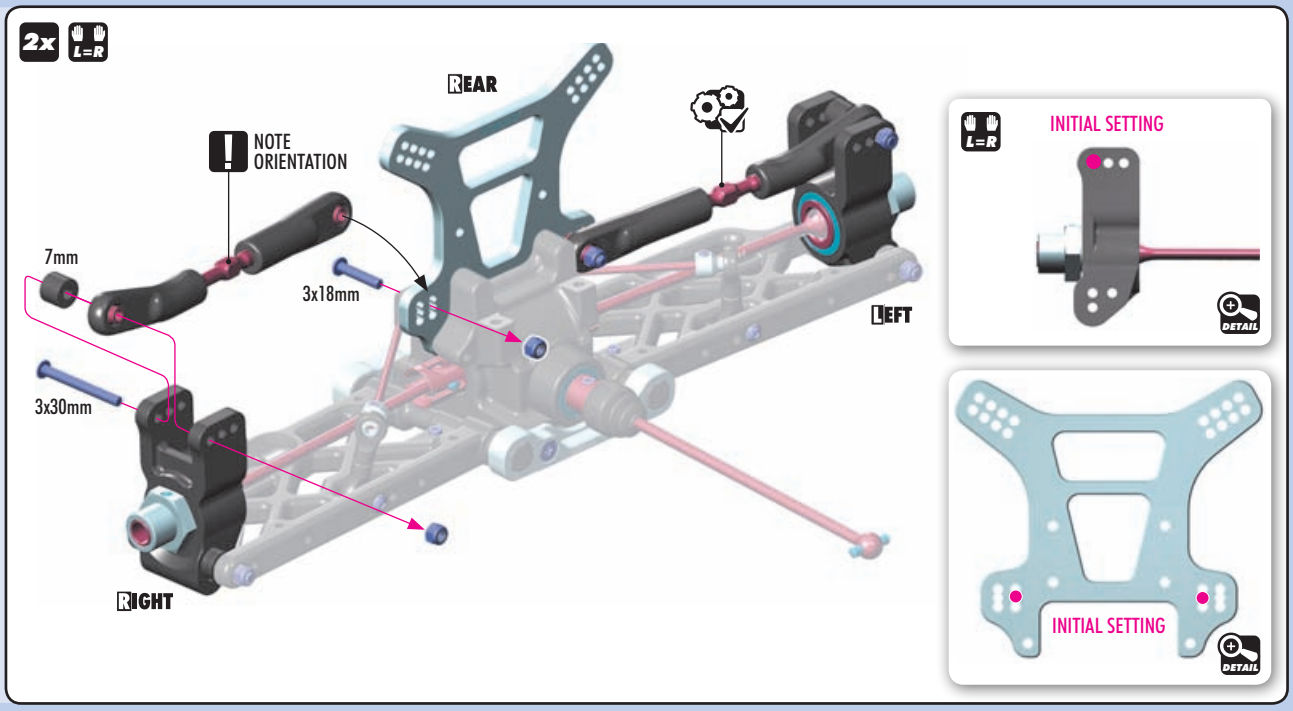

903312
SFH M3x12

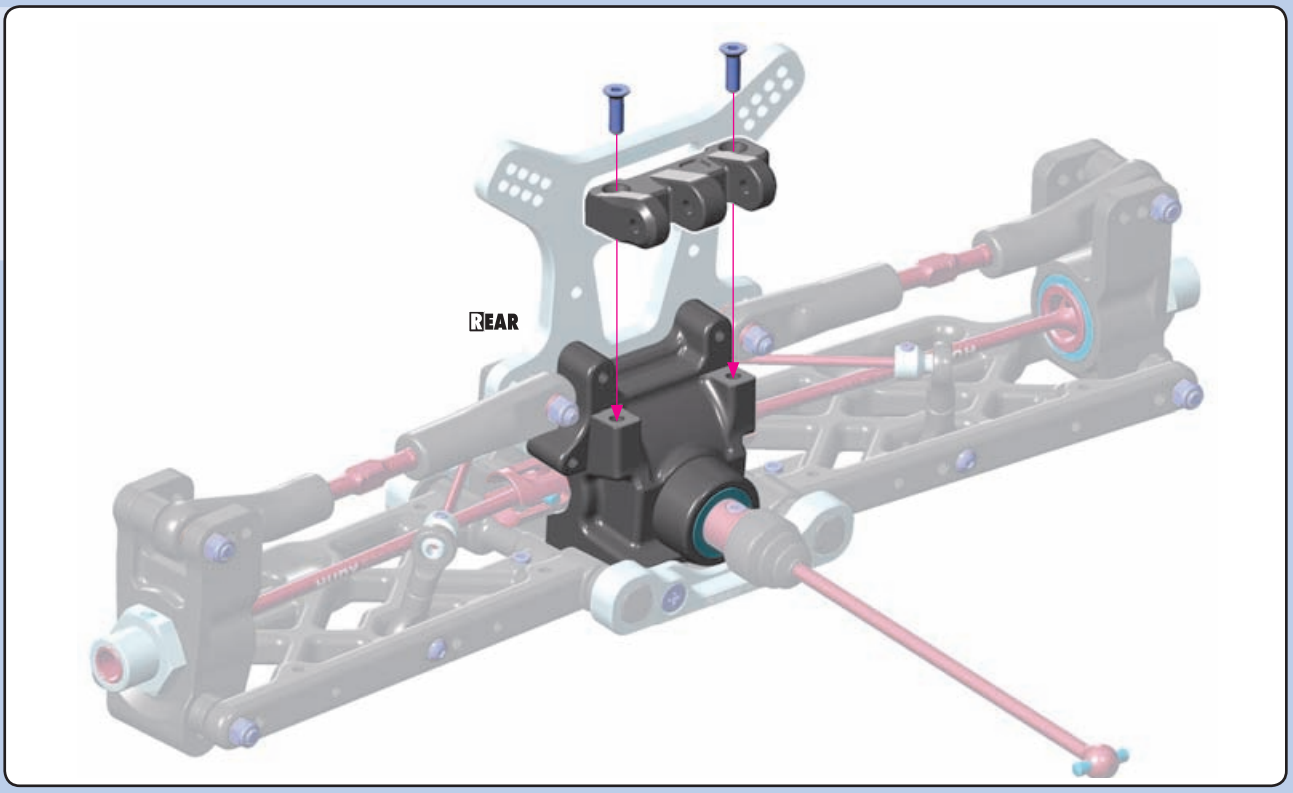

902314
SH M3x14

908318
SCH M3x18

960030
N M3

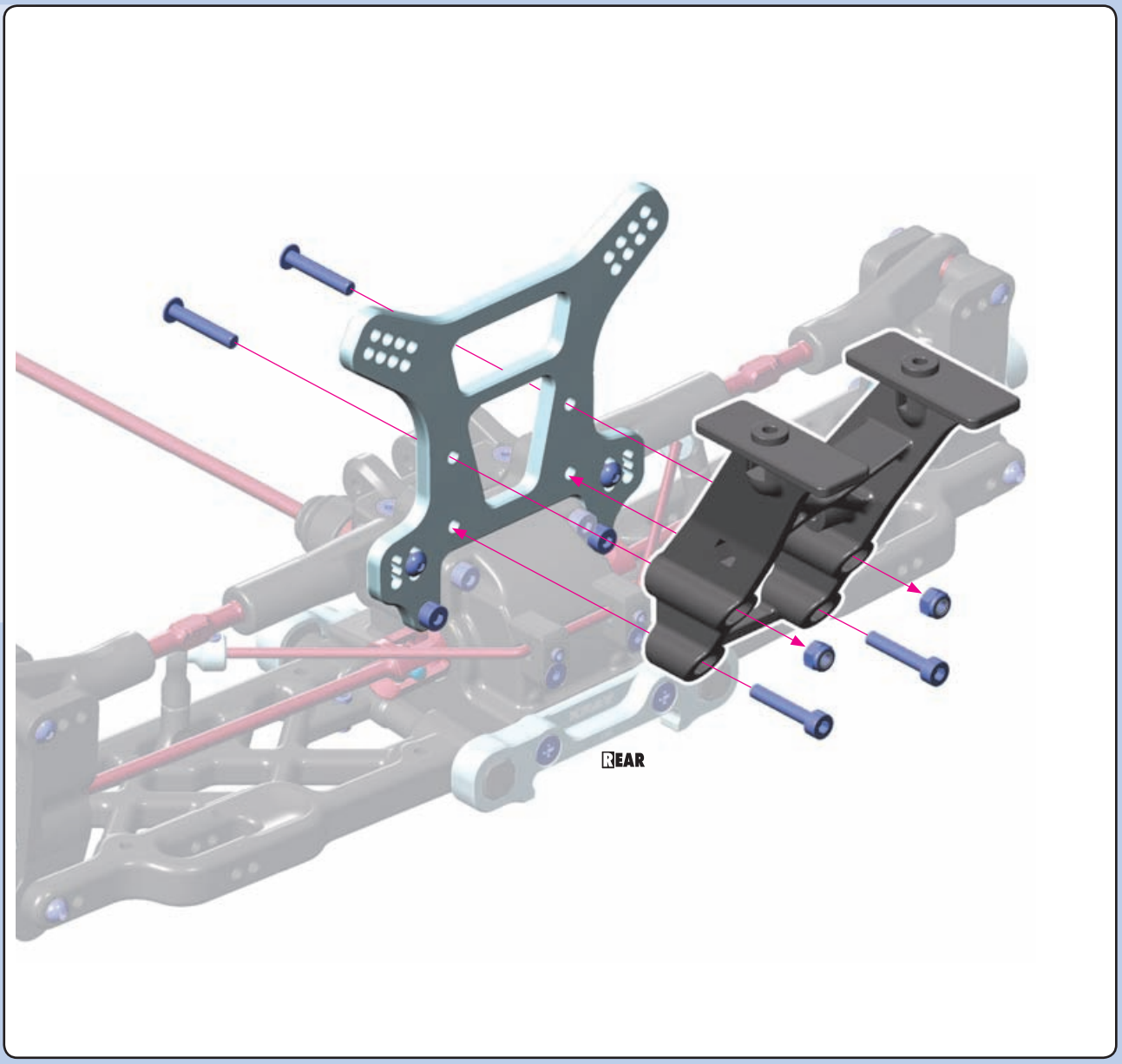

5. FRONT SUSPENSION

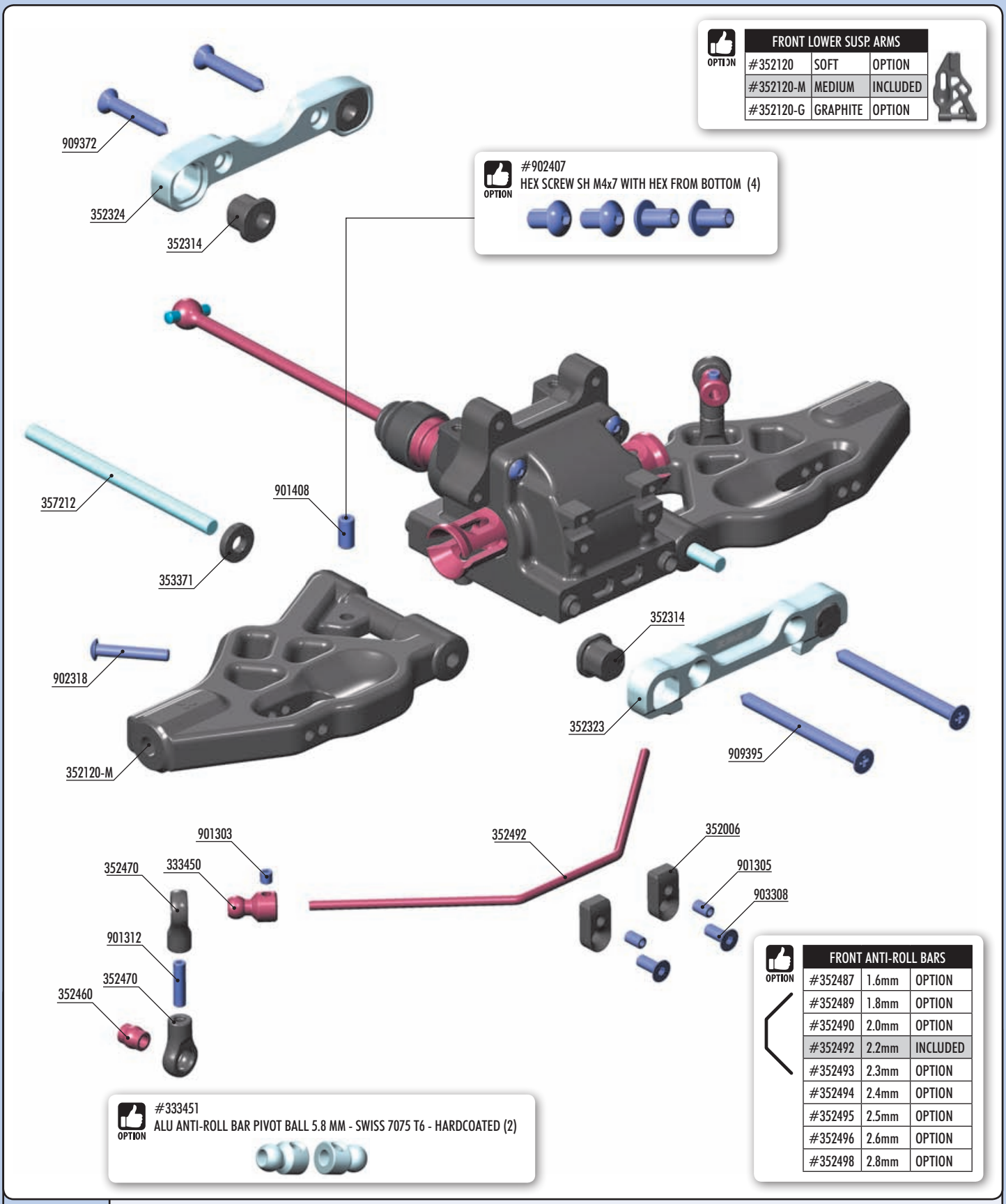

OPTION

FRONT LOWER SUSP. ARMS		
#352120	SOFT	OPTION
#352120-M	MEDIUM	INCLUDED
#352120-G	GRAPHITE	OPTION

OPTION

#902407
HEX SCREW SH M4x7 WITH HEX FROM BOTTOM (4)

OPTION

#333451
ALU ANTI-ROLL BAR PIVOT BALL 5.8 MM - SWISS 7075 T6 - HARDCOATED (2)

OPTION

FRONT ANTI-ROLL BARS		
#352487	1.6mm	OPTION
#352489	1.8mm	OPTION
#352490	2.0mm	OPTION
#352492	2.2mm	INCLUDED
#352493	2.3mm	OPTION
#352494	2.4mm	OPTION
#352495	2.5mm	OPTION
#352496	2.6mm	OPTION
#352498	2.8mm	OPTION

BAG 05

333450	ANTI-ROLL BAR BALL JOINT 5.8 MM (2)	357212	LOWER INNER PIVOT PIN F+R (2)
352006	DIFF BULKHEAD BLOCK SET FRONT/REAR		
352120-M	COMPOSITE FRONT LOWER SUSPENSION ARM - MEDIUM	901303	HEX SCREW SB M3x3 (10)
352323	ALU FRONT LOWER SUSP. HOLDER - FRONT - SQUARE ADJ. ROLL CENTER - V2	901305	HEX SCREW SB M3x5 (10)
352324	ALU FRONT LOWER SUSP. HOLDER - REAR - SQUARE ADJ. ROLL CENTER - V2	901312	HEX SCREW SB M3x12 (10)
352314	COMPOSITE SQUARE ADJ. ROLL CENTER BUSHINGS - V2 (2)	901408	HEX SCREW SB M4x8 (10)
352460	PIVOT BALL 5.8 (10)	902318	HEX SCREW SH M3x18 (10)
352470	BALL JOINT 5.8 (8)	903308	HEX SCREW SFH M3x8 (10))
352492	FRONT ANTI-ROLL BAR 2.4MM	909372	SCREW PHILLIPS SS 3.5x22 (10)
353371	SET OF COMPOSITE LOWER ARM SHIMS	909395	SCREW PHILLIPS SS 3.5x45 (10)


353371
SHIM 4x10x2


901408
SB M4x8


909372
SS 3.5x22


909395
SS 3.5x45

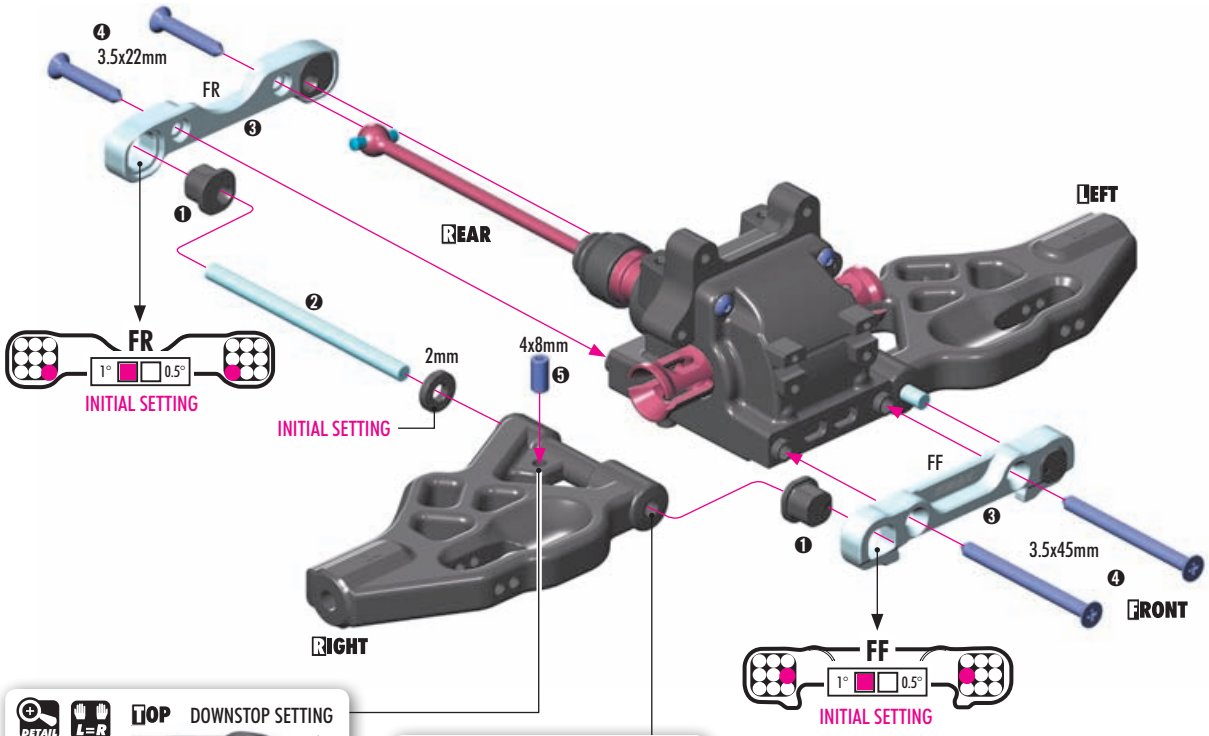

DETAIL L=R

TOP DOWNSTOP SETTING

BOTTOM 0.0mm

OPTION #902407

Downstop screw for fine tuning.

TIP L=R DETAIL

If the suspension arms do not move freely, use a HUDY Arm Reamer to resize the holes.

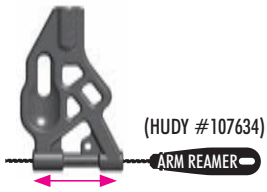

All possible mounting alternatives of eccentric bushings

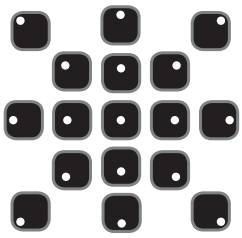

FRONT ARM

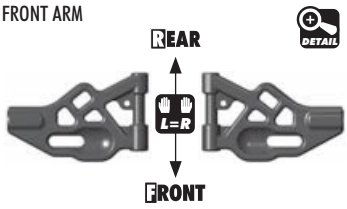

DETAIL

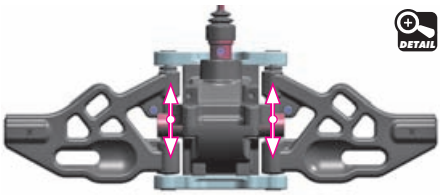

Push the arm from both sides to create play

DETAIL

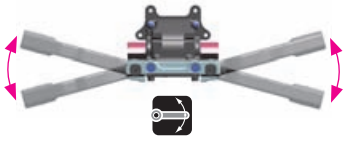

Check for free movement

Eccentric bushings have two different offsets from the center.


Middle position = 0.5 mm or 0.5° from center


Outer position = 1mm or 1° from center

The XRAY alu front lower suspension holders provide even greater range of adjustment for the front suspension. Using different combinations of eccentric bushings, fine adjustment of front kick-up, roll center, and front track-width can be obtained. For more information about the influence of kick-up, front track-width, and roll centers on car handling, please refer to HUDY Off-Road Set-up Book (#209099).

TRACK-WIDTH

FF	FR	(mm)
		=308
		=306
		=310*

ROLL CENTER

FF	FR	(mm)
		=1
		=0
		=-1

The tables below describe the amounts of kick-up, front track-width change depending on the combinations of eccentric bushings used with 0 and 1mm, 1° offset. The 0.5mm, 0.5° represents the half change.

* Not recommended to use this setting.

SET-UP BOOK

KICK UP
ROLL CENTER DOWNSTOP
WHEELBASE
TRACK WIDTH

901312
SB M3x12

2x L=R

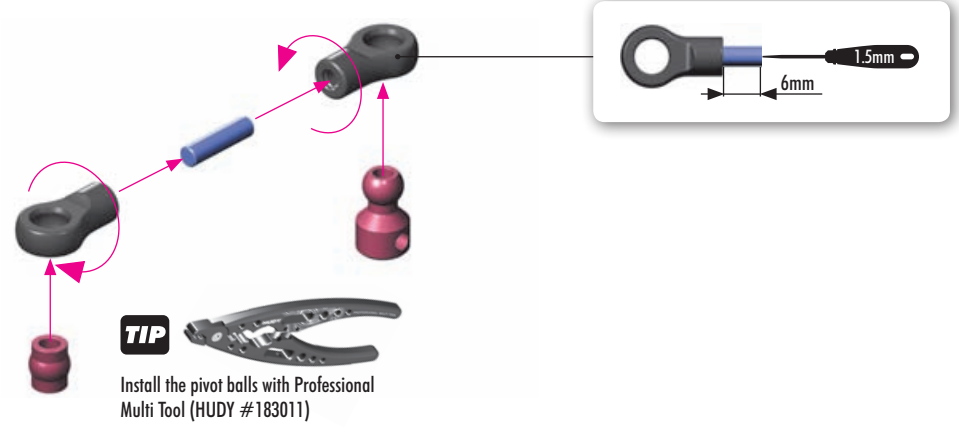

Install the pivot balls with Professional Multi Tool (HUDY #183011)

901303
SB M3x3

901305
SB M3x5

902318
SH M3x18

903308
SFH M3x8

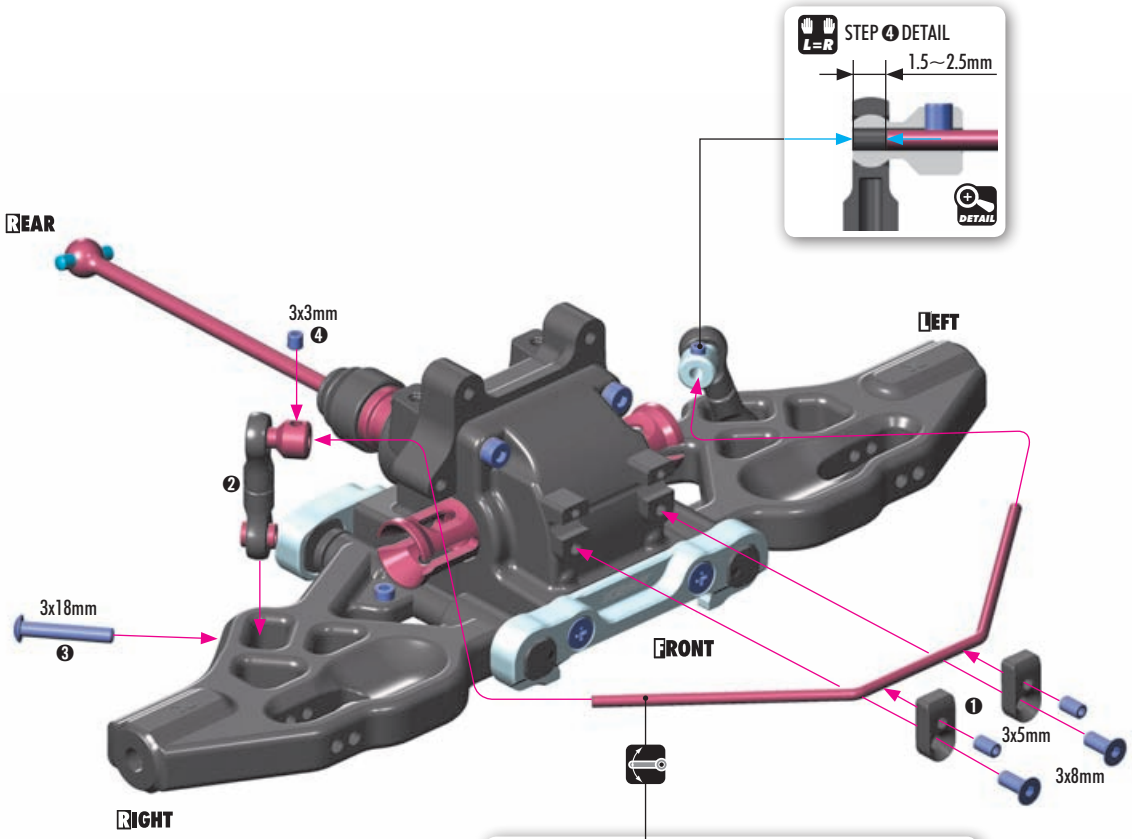

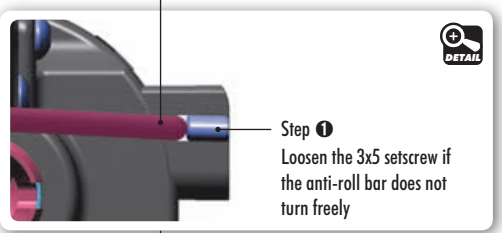

Step ❶
Loosen the 3x5 setscrew if the anti-roll bar does not turn freely

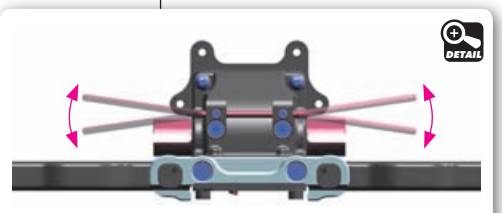

Step ❶ check for free movement

OPTION

FRONT ANTI-ROLL BARS		
#352487	1.6mm	OPTION
#352489	1.8mm	OPTION
#352490	2.0mm	OPTION
#352492	2.2mm	INCLUDED
#352493	2.3mm	OPTION
#352494	2.4mm	OPTION
#352495	2.5mm	OPTION
#352496	2.6mm	OPTION
#352498	2.8mm	OPTION

SET-UP BOOK
ANTI-ROLL BAR

OPTION

FRONT UPPER SUSP. ARMS		
#352133	SOFT	OPTION
#352133-M	MEDIUM	INCLUDED
#352133-G	GRAPHITE	OPTION

OPTION

OFFSET WHEEL AXLES		
#355250	0mm	OPTION
#355251	+1mm	INCLUDED
#355252	+2mm	OPTION

OPTION

STEERING BLOCKS		
#352244	HARD	INCLUDED
#352244-G	GRAPHITE	OPTION

OPTION

#357253
BRASS ADJUSTING NUT M15x1

OPTION

ALU STEERING PLATE		
#352372	1 DOTS	OPTION
#352370	2 DOTS	INCLUDED

BAG 06

352133-M	FRONT UPPER ARM	357252	ALU ADJUSTING NUT M15x1 (2)
352244	STEERING BLOCK	357254-G	COMPOSITE BALL CUP 13.9 MM - GRAPHITE (2)
352370	ALU STEERING PLATE - SWISS 7075 T6 (L+R)	357256	ALU SHIM 6x13x1 (2)
355215	CVD ADJUSTABLE DRIVE AXLE - HUDY SPRING STEEL™ (2)	901504	HEX SCREW SB M5x4 (10)
355221	CVD UNIVERSAL DRIVE SHAFT - HUDY SPRING STEEL™	903312	HEX SCREW SFH M3x12 (10)
355237	CVD DRIVE SHAFT COUPLING - HUDY SPRING STEEL™	940816	BALL-BEARING 8x16x5 RUBBER SEALED - GREASE (2)
355251	ALU WHEEL AXLE OFFSET "+1MM" - HARD COATED (2)	941318	BALL-BEARING 13x19x4 RUBBER SEALED - GREASE (2)
357250	STEEL PIVOT BALL 13.7 MM (2)	980263	PIN 2.5x13 (10)
357251	ALU PIVOT BALL 13.7 MM WITH STEEL SCREW (2)	980317	PIN 3x17 (10)

901504
SB M5x4

940816
BB 8x16x5

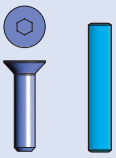

903312
SFH M3x12

980317
P 3x17

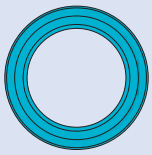

941318
BB 13x19x4

980263
P 2.5x13

2x L=R

NOTE ORIENTATION

Follow the TECH TIP on page 5 for drive shaft pin servicing TIP

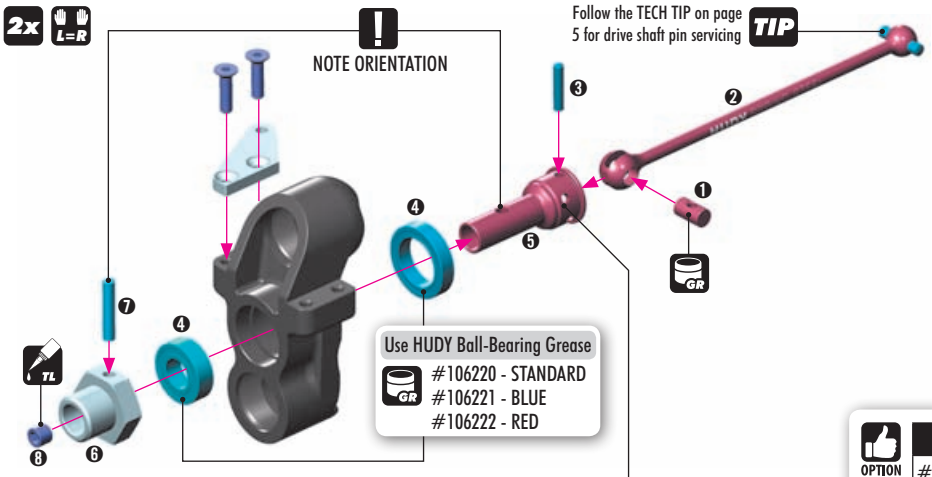

Use HUDY Ball-Bearing Grease
GR #106220 - STANDARD
#106221 - BLUE
#106222 - RED

OPTION

#357253
BRASS ADJUSTING NUT M15x1

OPTION

ALU STEERING PLATE		
#352372	1 DOTS	OPTION
#352370	2 DOTS	INCLUDED

DETAIL

The US KITS do NOT INCLUDE #355215 - CVD Adjustable Drive Axles but includes standard #355211 CVD DRIVE AXLE - HUDY SPRING STEEL™

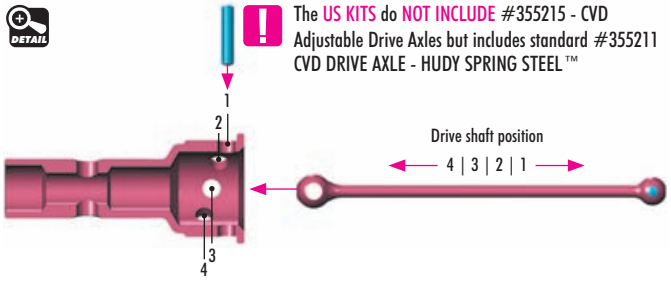

OPTION

STEERING BLOCKS		
#352244	HARD	INCLUDED
#352244-G	GRAPHITE	OPTION

TIP

To tighten the setscrew you can also use the (HUDY 17mm Wheel Nut Tool #107570)

OPTION

FRONT UPPER SUSP. ARMS		
#352133	SOFT	OPTION
#352133-M	MEDIUM	INCLUDED
#352133-G	GRAPHITE	OPTION

OPTION

OFFSET WHEEL AXLES		
#355250	0mm	OPTION
#355251	+1mm	INCLUDED
#355252	+2mm	OPTION

6. FRONT SUSPENSION

2x L=R

ALU pivot ball
BLACK color

WD40

STEEL pivot ball
SILVER color

TIP Tighten hex nuts using HUDY tool #107581

OPTION #357253 Brass Adjusting Nut M15x1

DETAIL

PIVOT BALLS MUST MOVE FREELY
During initial assembly, tighten each hex nut until the pivot ball starts to bind, then loosen slightly. Verify that the pivot balls move freely.

357256
SHIM 6x13x1

2x L=R

1mm

TIP 2.5mm
HUDY Tool Allen 2.5mm

OPTION

FRONT UPPER SUSP. ARMS		
#352133	SOFT	OPTION
#352133-M	MEDIUM	INCLUDED
#352133-G	GRAPHITE	OPTION

SET-UP BOOK
CAMBER
TRACK-WIDTH

2x L=R

LEFT

FRONT

RIGHT

TIP 2.5mm
HUDY Tool Allen 2.5mm

SET-UP BOOK
ROLL CENTER

960030
960030
902340
353082
960040
902335
353580
351200
351113
351200
903412
903412
903412

OPTION
#353280
GRAPHITE BRACES FOR REAR COMPOSITE BRACE - SET

960030
353280
353280
902312

BAG 06

351113	XB8'19 ALU CHASSIS - SWISS 7075 T6 (3MM)	902335	HEX SCREW SH M3x35 (10)
351200	FRONT & REAR BUMPER - V2	902340	HEX SCREW SH M3x40 (10)
353082	COMPOSITE REAR BRACE - MEDIUM - M	903412	HEX SCREW SFH M4x12 (10)
353580	COMPOSITE WING HOLDER BRACE WITH REAR BODY POST	960030	NUT M3 (10)
		960040	NUT M4 (10)

903412
SFH M4x12

REAR
LEFT
RIGHT

6. FRONT & REAR ASSEMBLY

902335
SH M3x35

960030
N M3

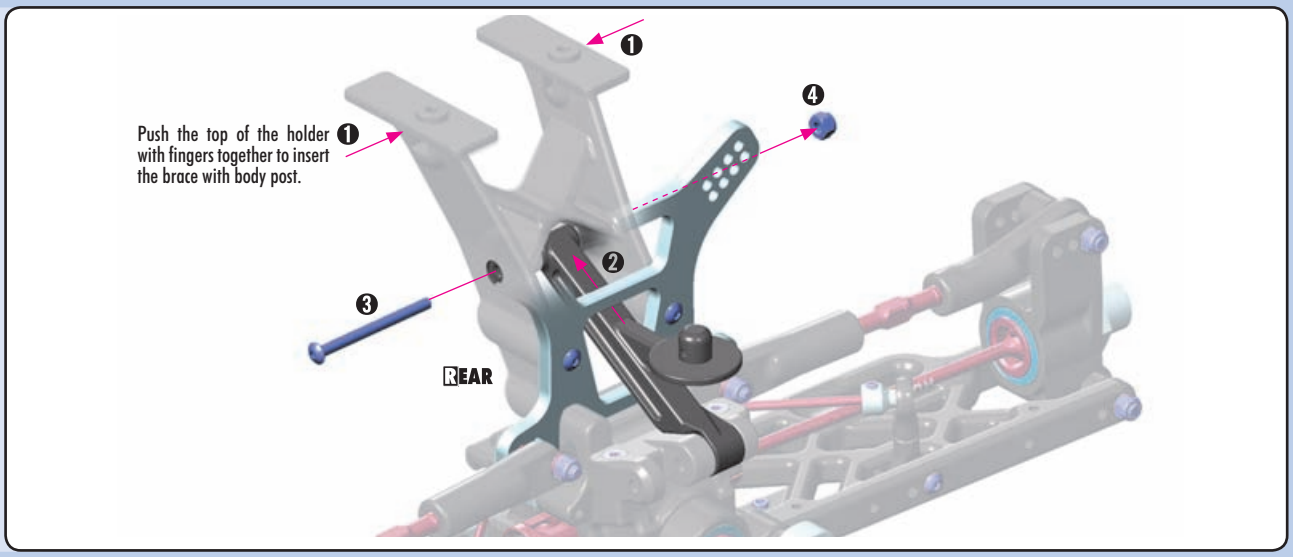

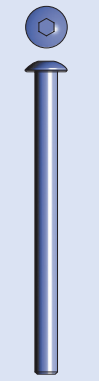

902340
SH M3x40

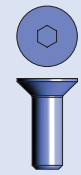

903412
SFH M4x12

960030
N M3

960040
N M4

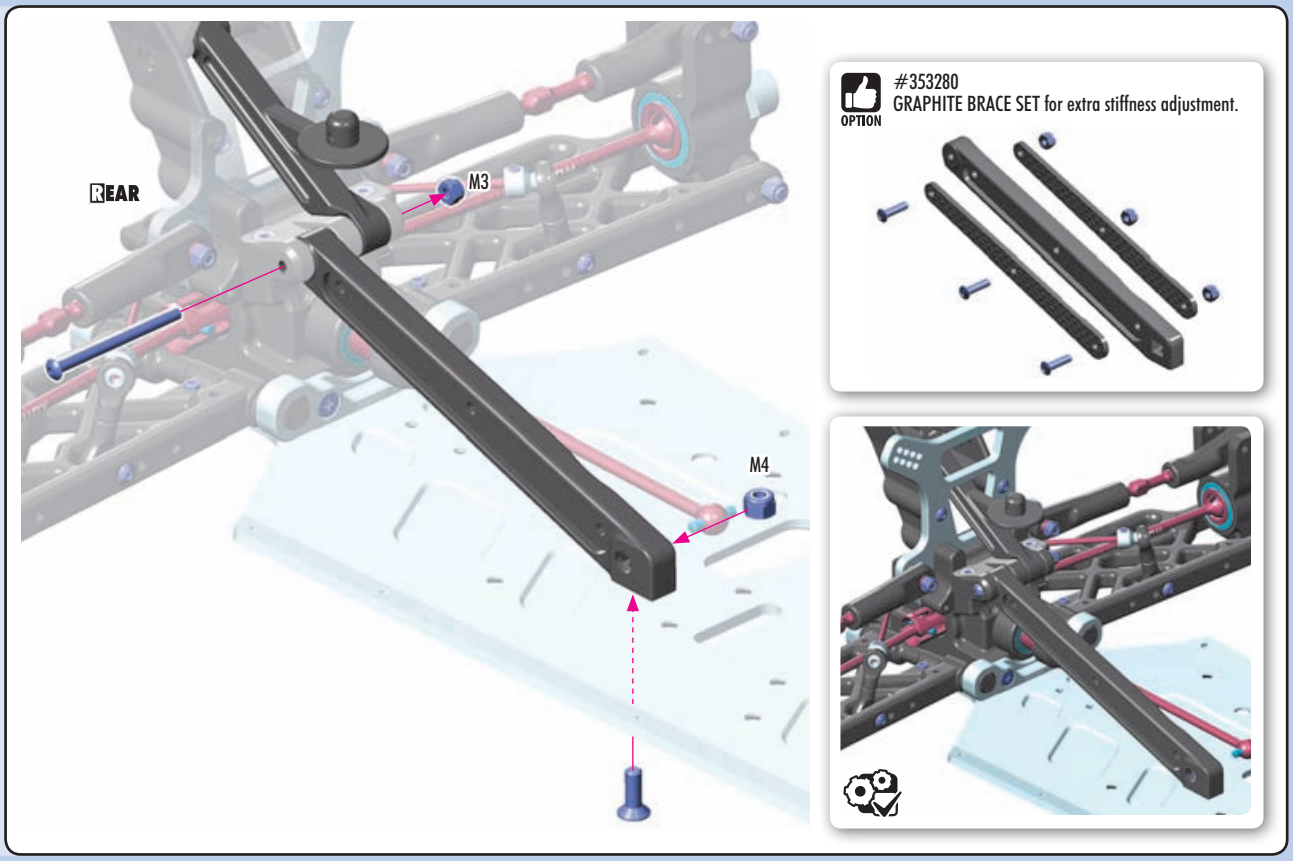

903412
SFH M4x12

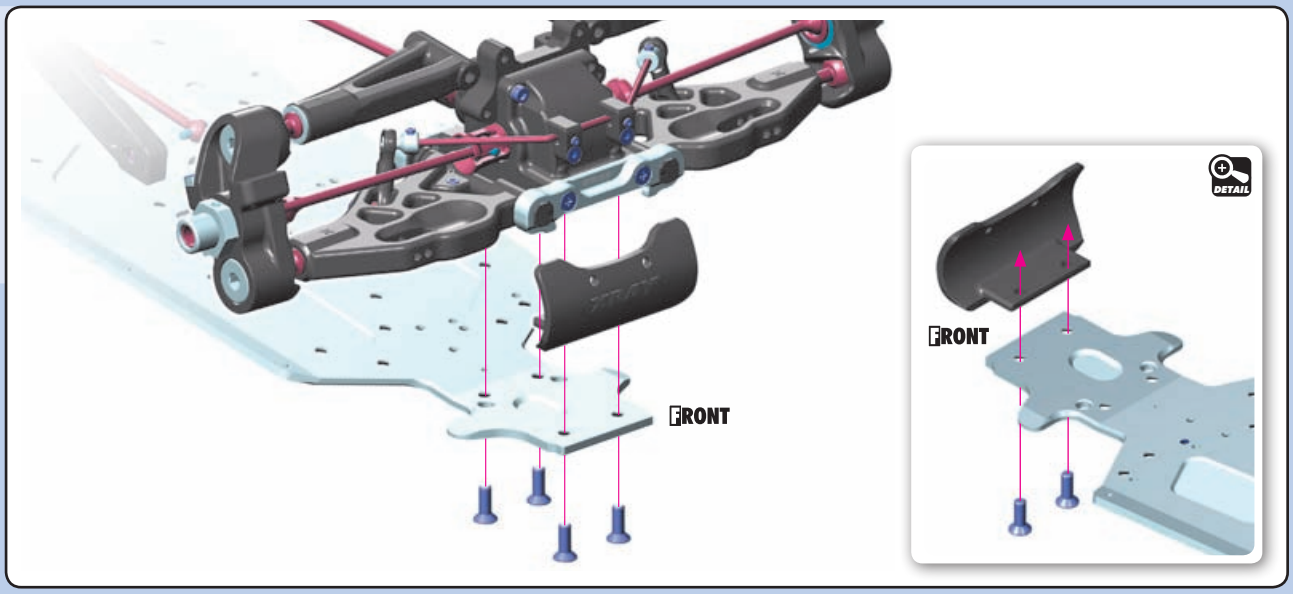

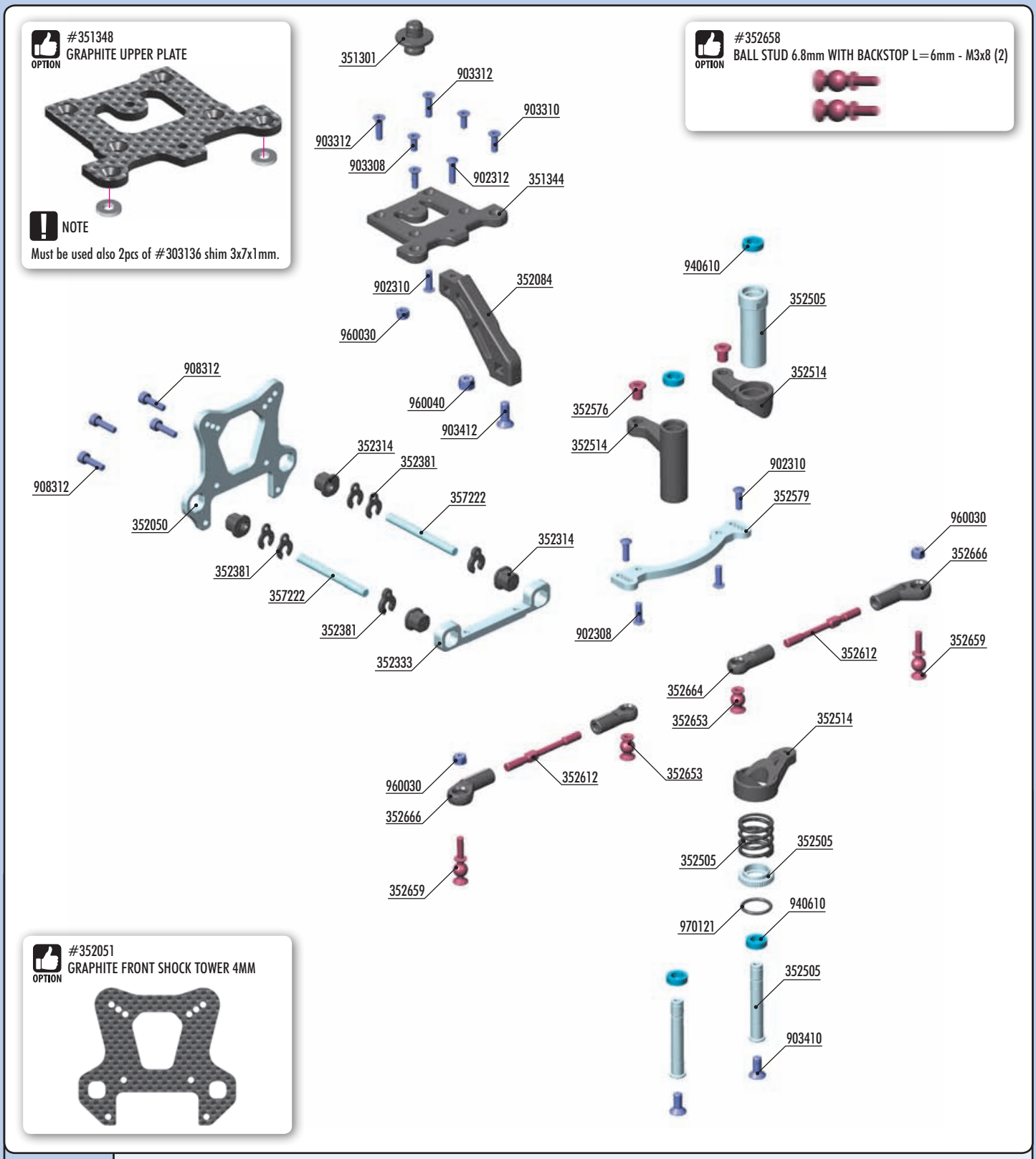

BAG 07

351301	BODY POSTS	357222	FRONT UPPER PIVOT PIN 4x45 (2)
351344	COMPOSITE UPPER PLATE		
352084	COMPOSITE FRONT BRACE	902308	HEX SCREW SH M3x8 (10)
352050	ALU FRONT SHOCK TOWER - CNC MACHINED 7075 T6 (4MM)	902310	HEX SCREW SH M3x10 (10)
352314	COMPOSITE SQUARE ADJ. ROLL CENTER BUSHINGS - V2 (2)	902312	HEX SCREW SH M3x12 (10)
352333	ALU FRONT UPPER ARM HOLDER - SWISS 7075 T6 (6MM)	903308	HEX SCREW SFH M3x8 (10)
352381	CASTER CLIPS (2)	903310	HEX SCREW SFH M3x10 (10)
352505	SERVO SAVER COMPLETE SET - GRAPHITE	903312	HEX SCREW SFH M3x12 (10)
352514	COMPOSITE SERVO SAVER - GRAPHITE	903410	HEX SCREW SFH M4x10 (10)
352576	STEERING PLATE BUSHING (2)	903412	HEX SCREW SFH M4x12 (10)
352579	ALU STEERING PLATE - SWISS 7075 T6	908312	HEX SCREW SOCKET HEAD CAP SCH M3x12 (10)
352612	ADJ. TURNBUCKLE M4 L/R 45 MM - HUDY SPRING STEEL™ (2)	940610	BALL-BEARING 6x10x3 RUBBER SEALED - OIL (2)
352653	BALL STUD 6.8MM WITH BACKSTOP - M3 (2)	960030	NUT M3 (10)
352659	BALL STUD 6.8MM WITH BACKSTOP L=6MM - M3x11 (2)	960040	NUT M4 (10)
352664	COMPOSITE STEERING BALL JOINT 6.8MM - V3 (2)	970121	O-RING 12.1 x 1.6 (10)
352666	COMPOSITE RELIEF STEERING BALL JOINT 6.8MM (2)		

970121
O 12.1x1.6

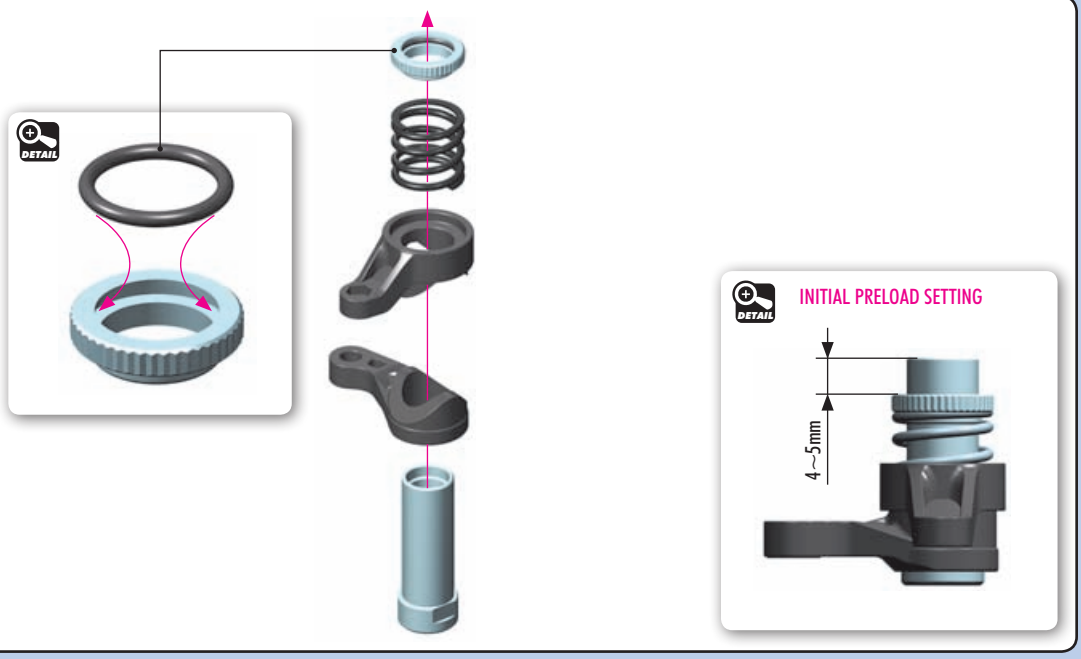

SET-UP BOOK
SERVO SAVER

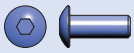

902308
SH M3x8

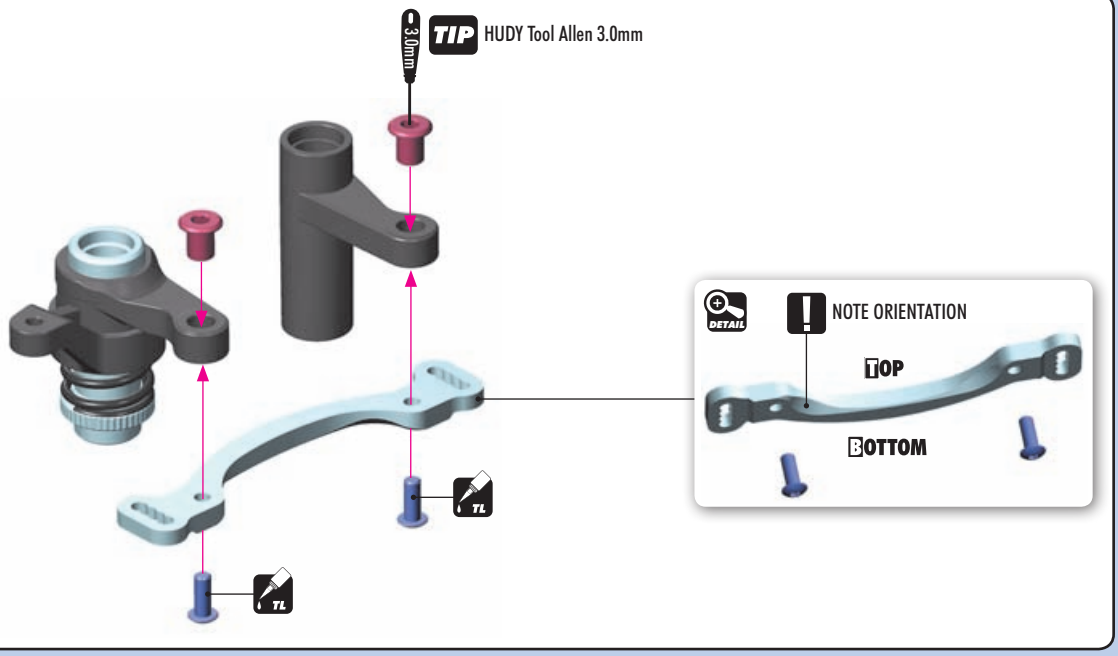

903410
SFH M4x10

940610
BB 6x10x3

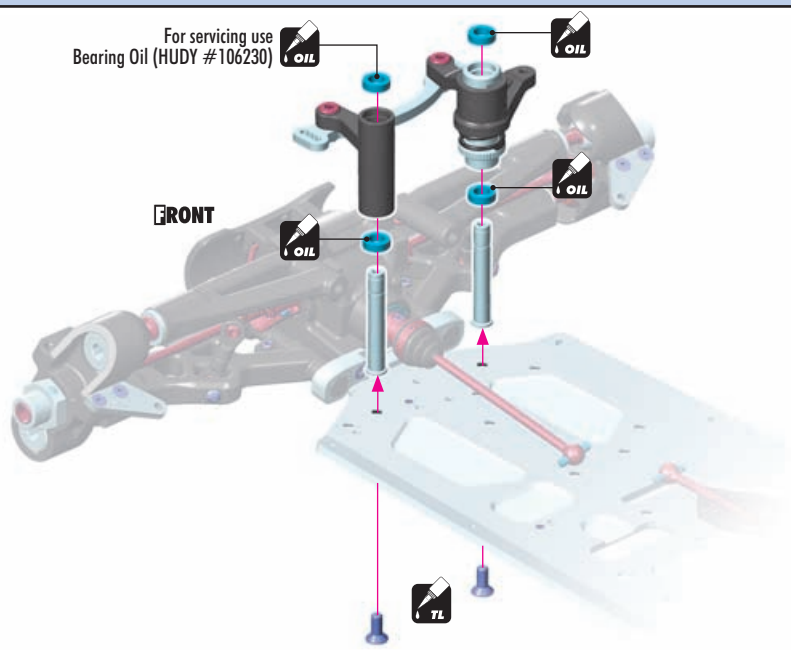

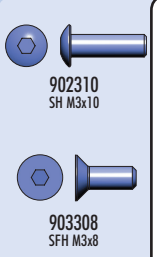

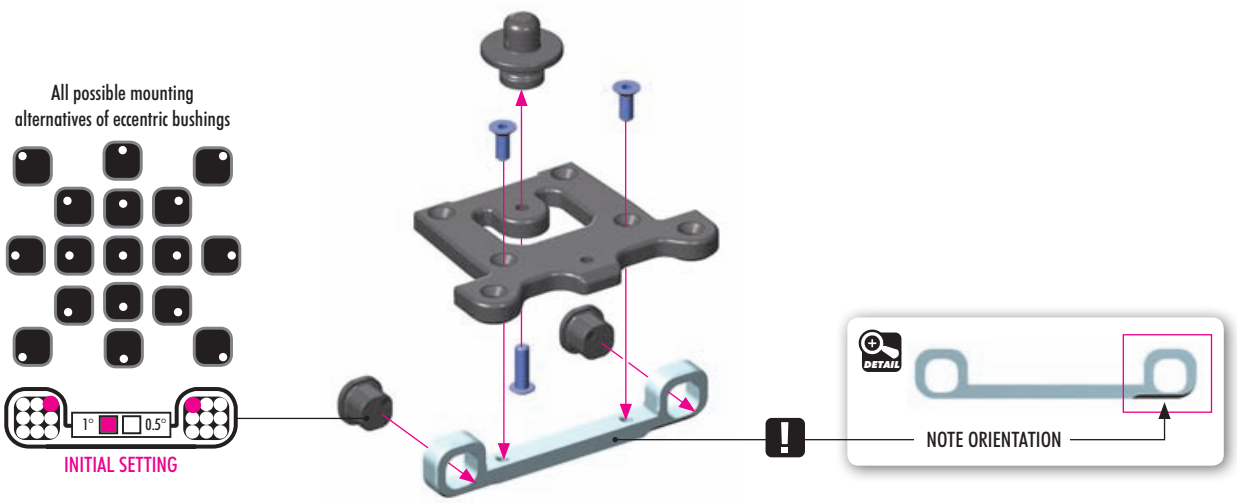

SET-UP BOOK
ROLL CENTER

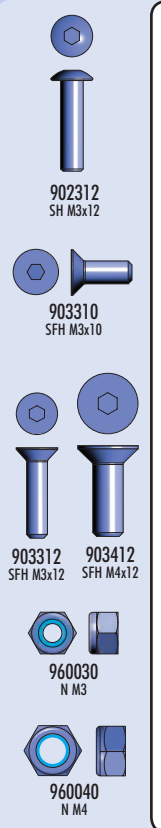

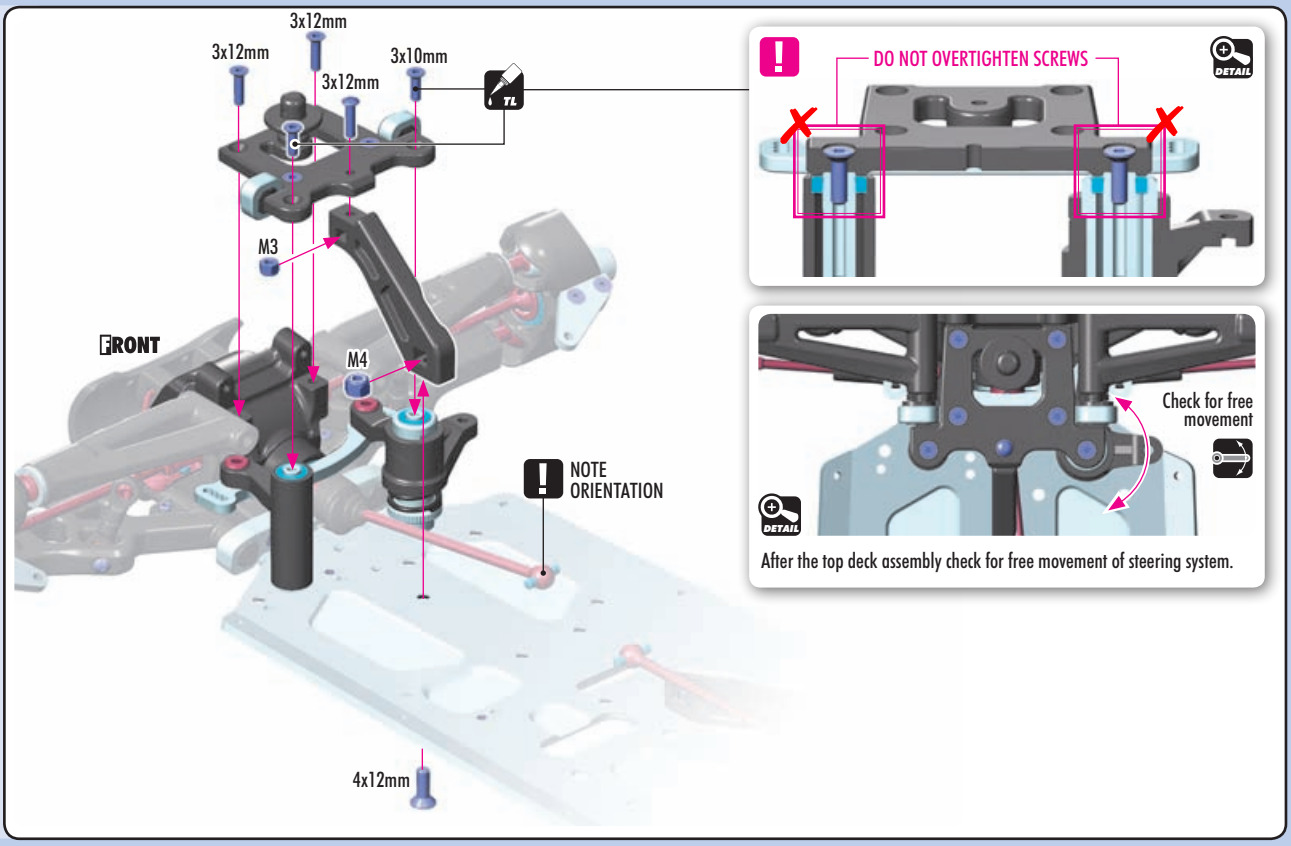

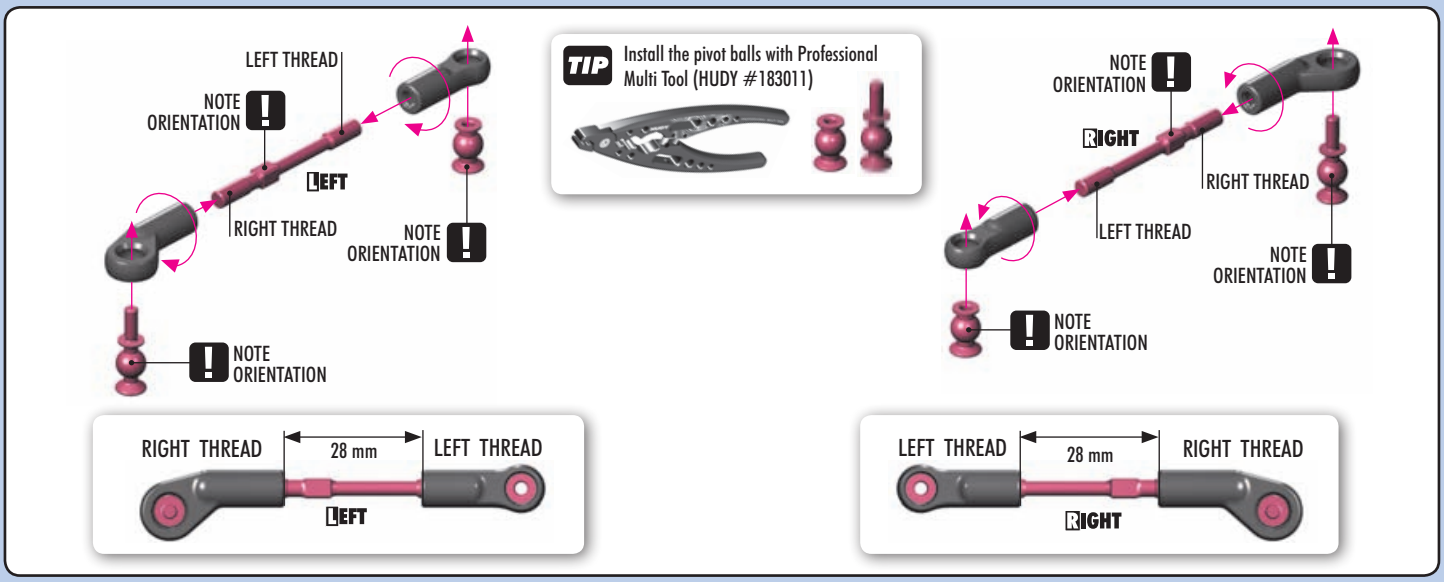

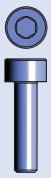

908312
SCH M3x12

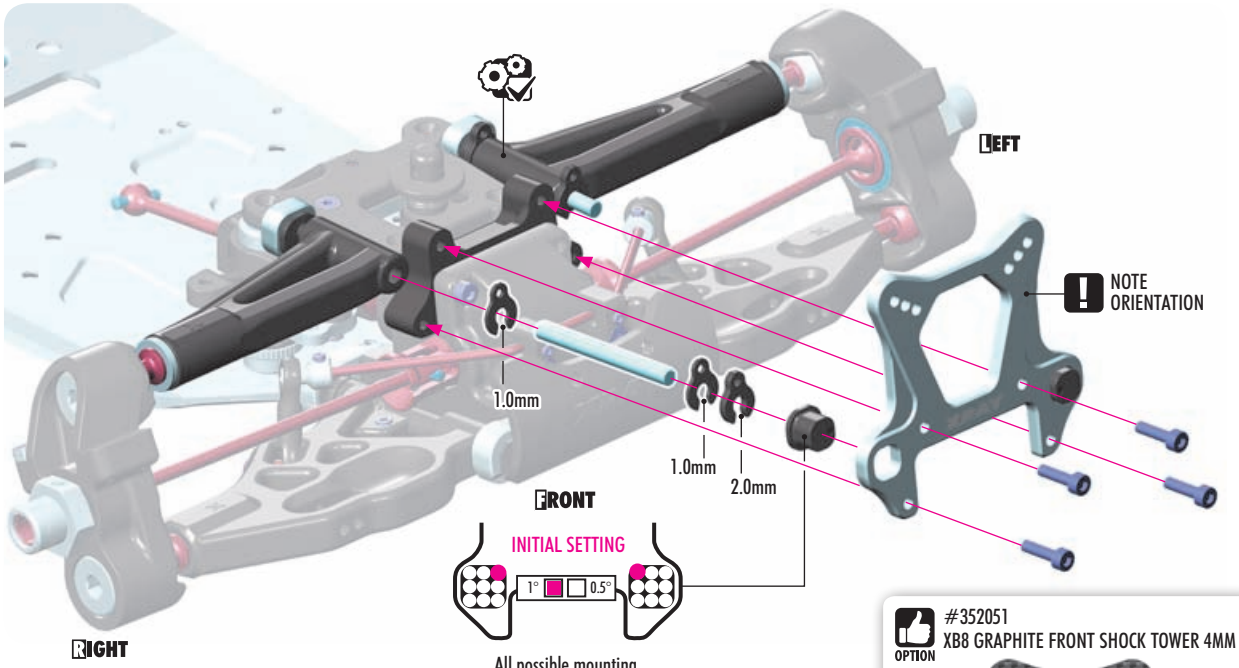

All possible mounting alternatives of eccentric bushings

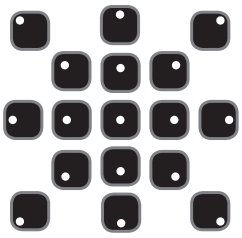

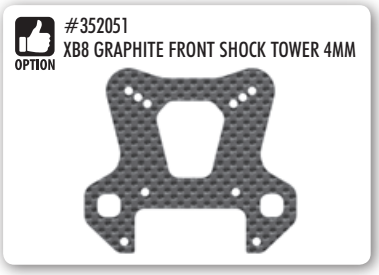

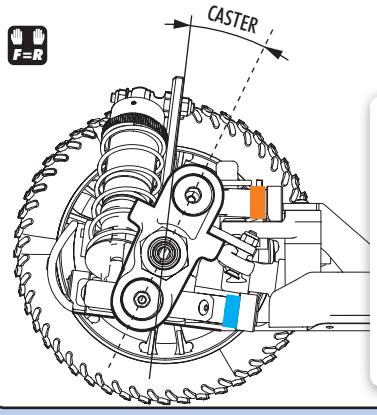

CASTER		
UPPER CLIP (Behind arm)	LOWER SHIM (Behind arm)	
	4mm	2mm
4mm	24°	21°
3mm	25.5°	22.5°
2mm	27°	24°
1mm	28.5°	25.5°
0	30°	27°

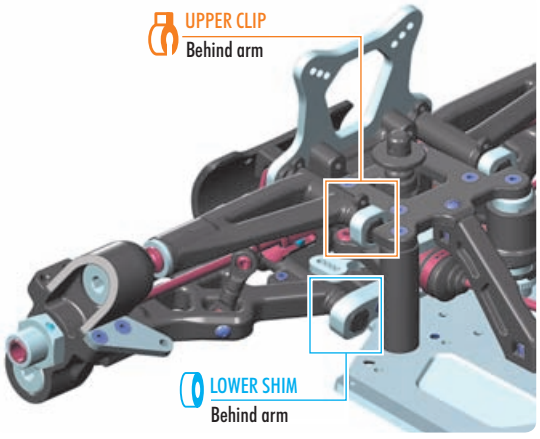

SET-UP BOOK
ROLL CENTER
CASTER

902310
SH M3x10

960030
N M3

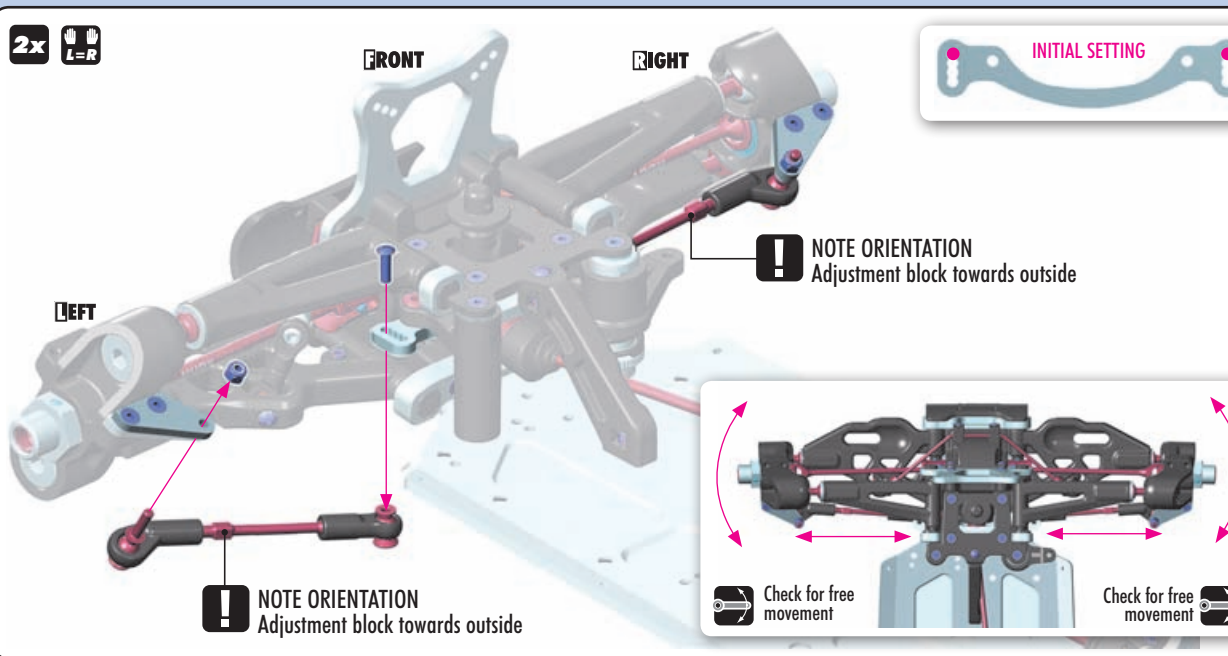

SET-UP BOOK
ACKERMANN
BUMP STEER
TOE-IN

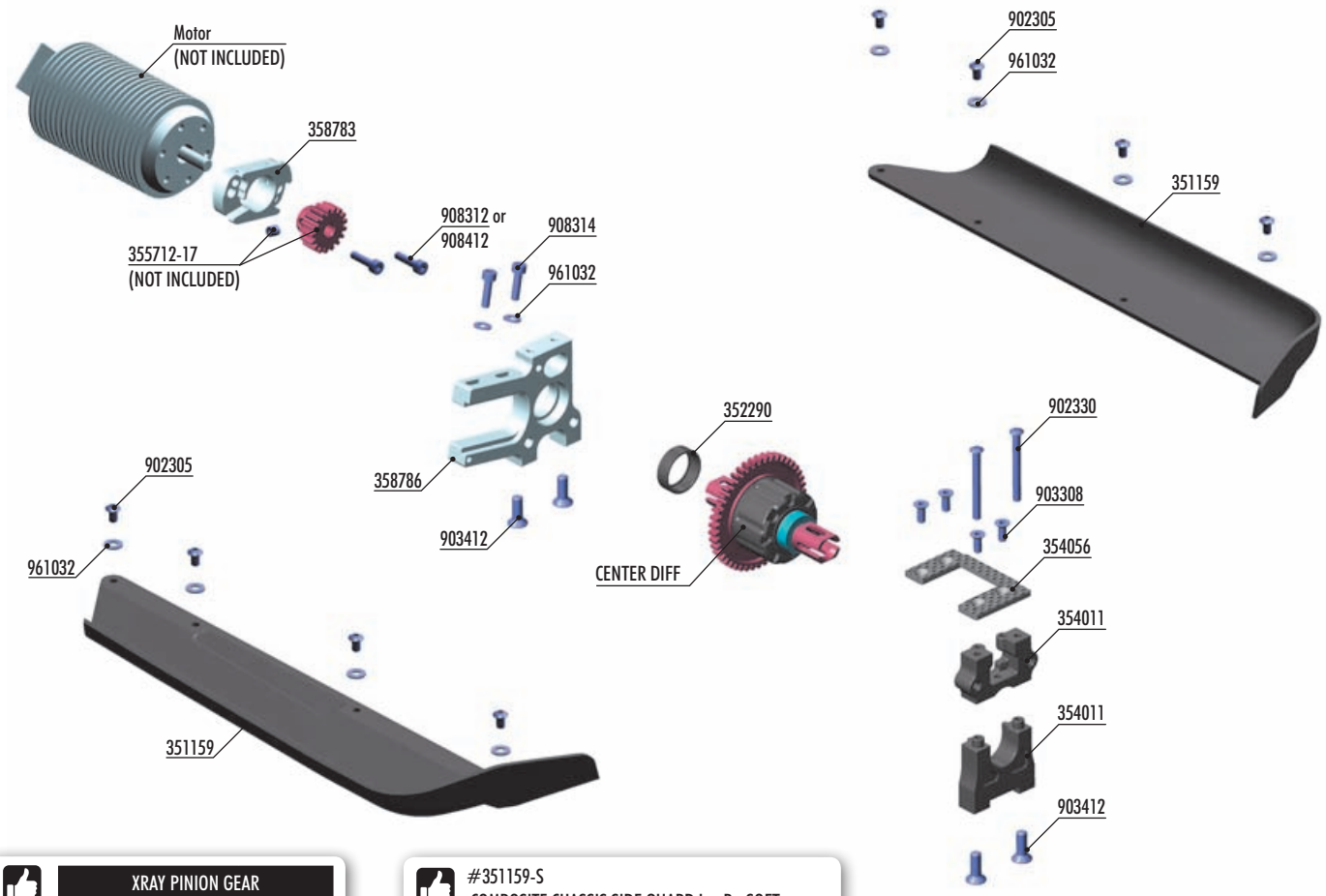

OPTION

XRAY PINION GEAR		
#355712	12T	OPTION
#355713	13T	OPTION
#355714	14T	OPTION
#355715	15T	OPTION
#355716	16T	OPTION
#355717	17T	OPTION

OPTION

#351159-S
COMPOSITE CHASSIS SIDE GUARD L+R - SOFT

OPTION

#353250
XB8 GRAPHITE BRACE FOR CHASSIS SIDE GUARDS - SET

BAG 08

35 1159	CHASSIS SIDE GUARDS L+R	90 2305	HEX SCREW SH M3x5 (10)
35 2290	COMPOSITE BUSHING FOR ALU STEERING BLOCK (4)	90 2330	HEX SCREW SH M3x30 (10)
35 4011	CENTER DIFF MOUNTING PLATE SET - HIGHER	90 3308	HEX SCREW SFH M3x8 (10)
35 4056	GRAPHITE CENTER DIFF MOUNTING PLATE	90 3412	HEX SCREW SFH M4x12 (10)
35 5712～17	XRAY 12～17T PINION GEAR (OPTION)	90 8312	HEX SCREW SOCKET HEAD CAP M3x12 (10)
35 8783	ALU MOTOR MOUNT PLATE - V2	90 8314	HEX SCREW SOCKET HEAD CAP M3x14 (10)
35 8786	XB8E/XT8E ALU MOTOR MOUNT	90 8412	HEX SCREW SOCKET HEAD CAP M4x12 (10)
		96 1032	WASHER S 3.2 (10)

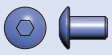

902305
SH M3x5

961032
S 3.2

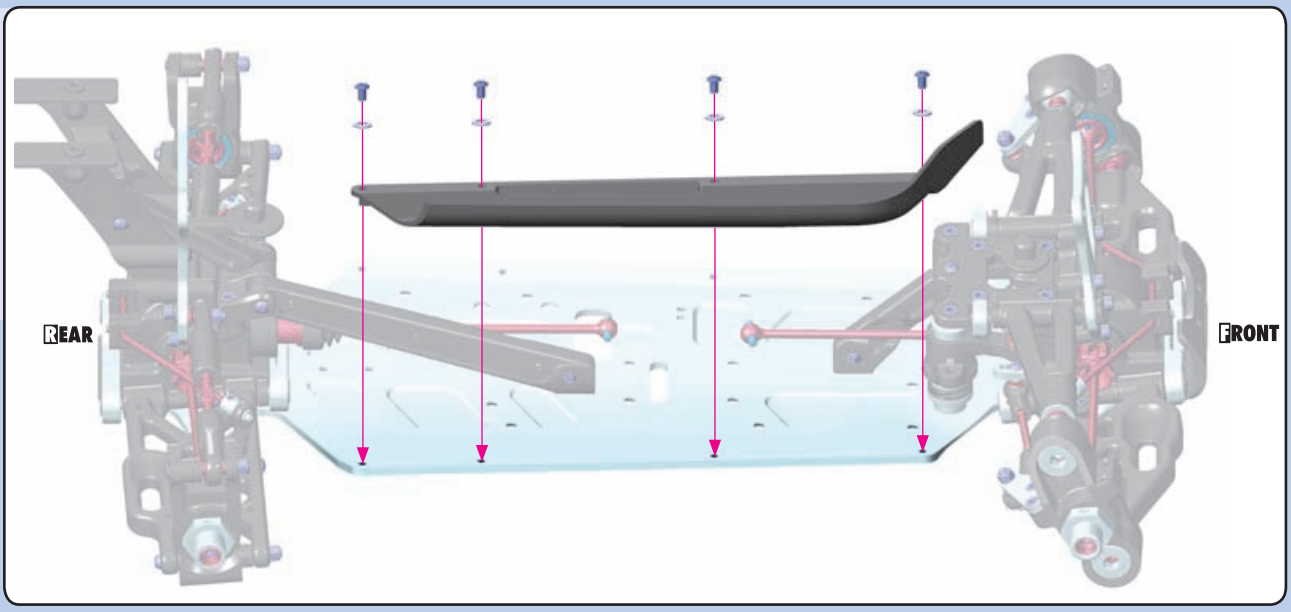

8. CENTER DIFF & BRAKE

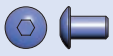

902305
SH M3x5

961032
S 3.2

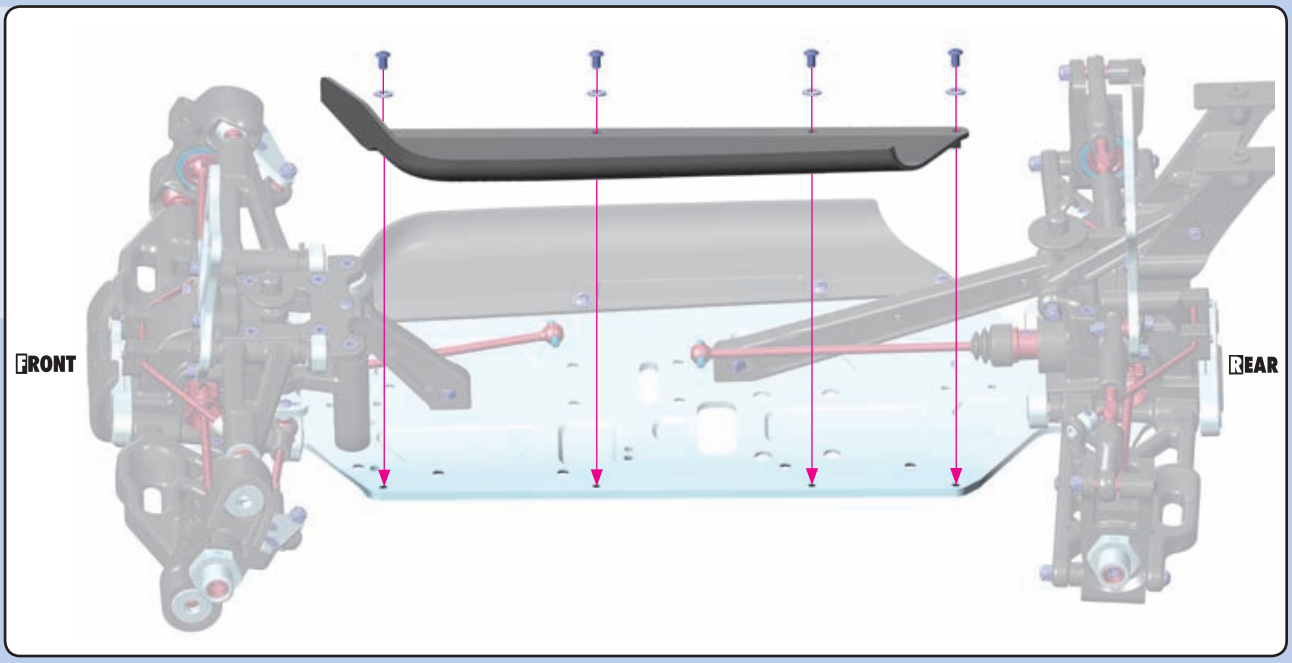

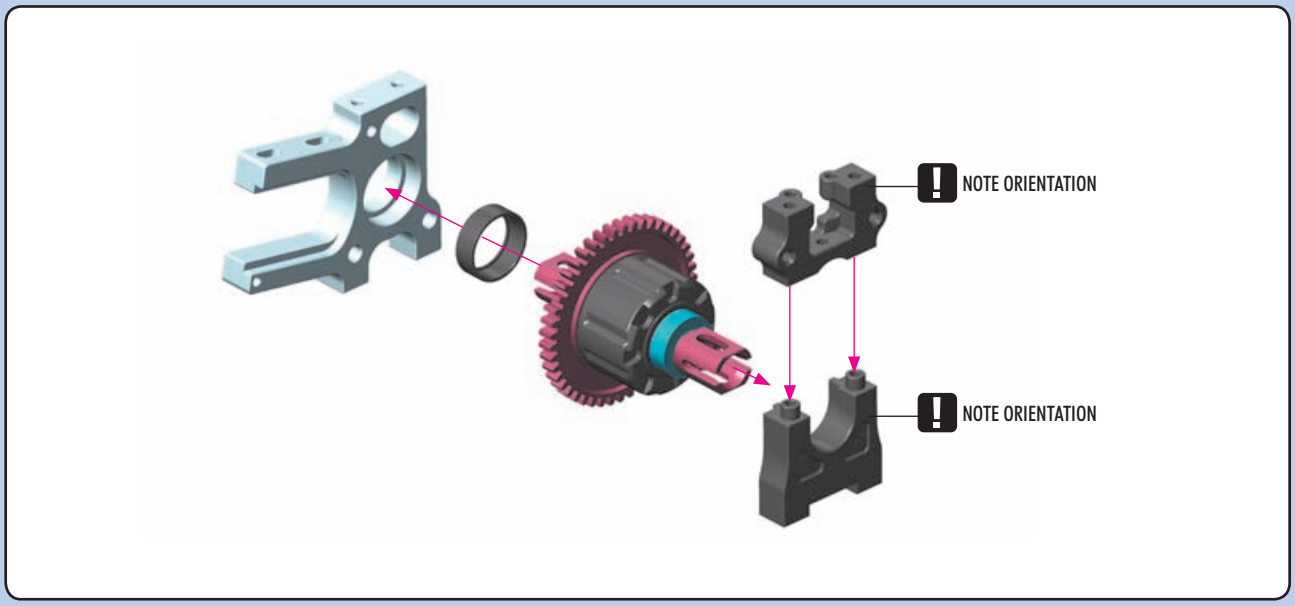

902330
SH M3x30

903308
SFH M3x8

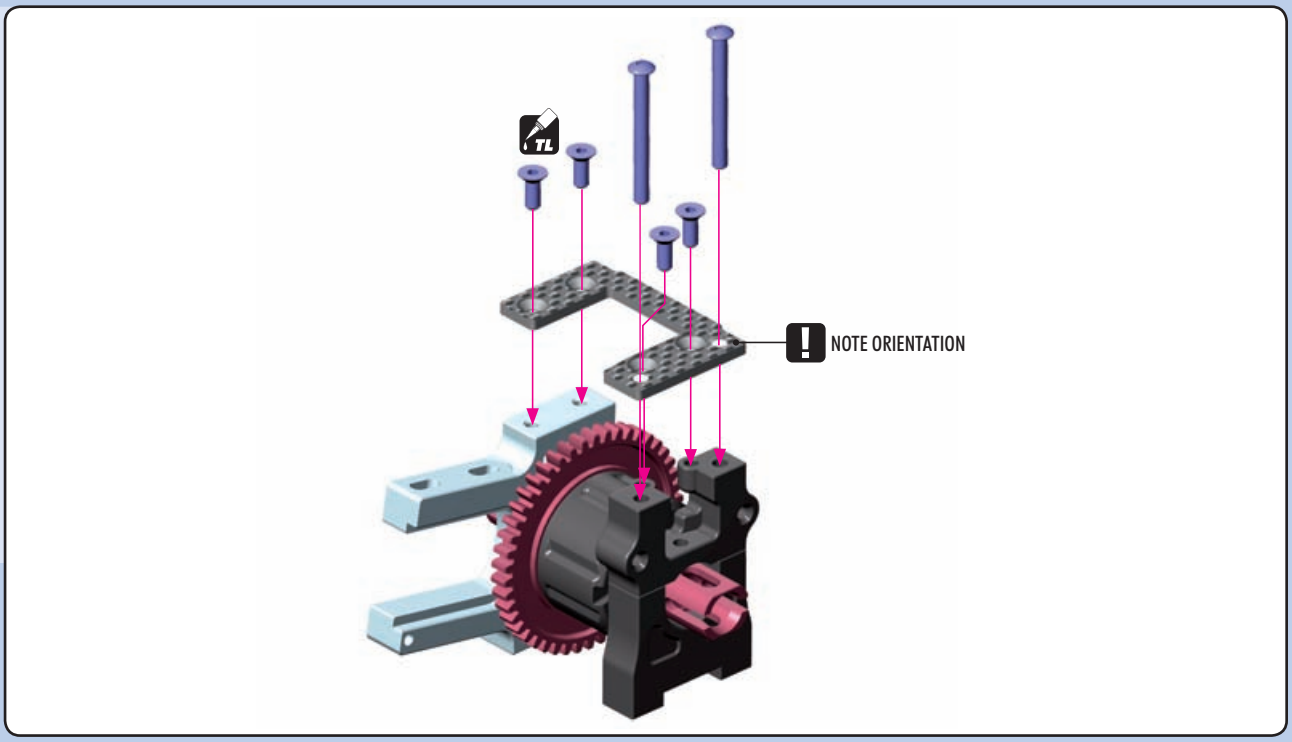

903412
SFH M4x12

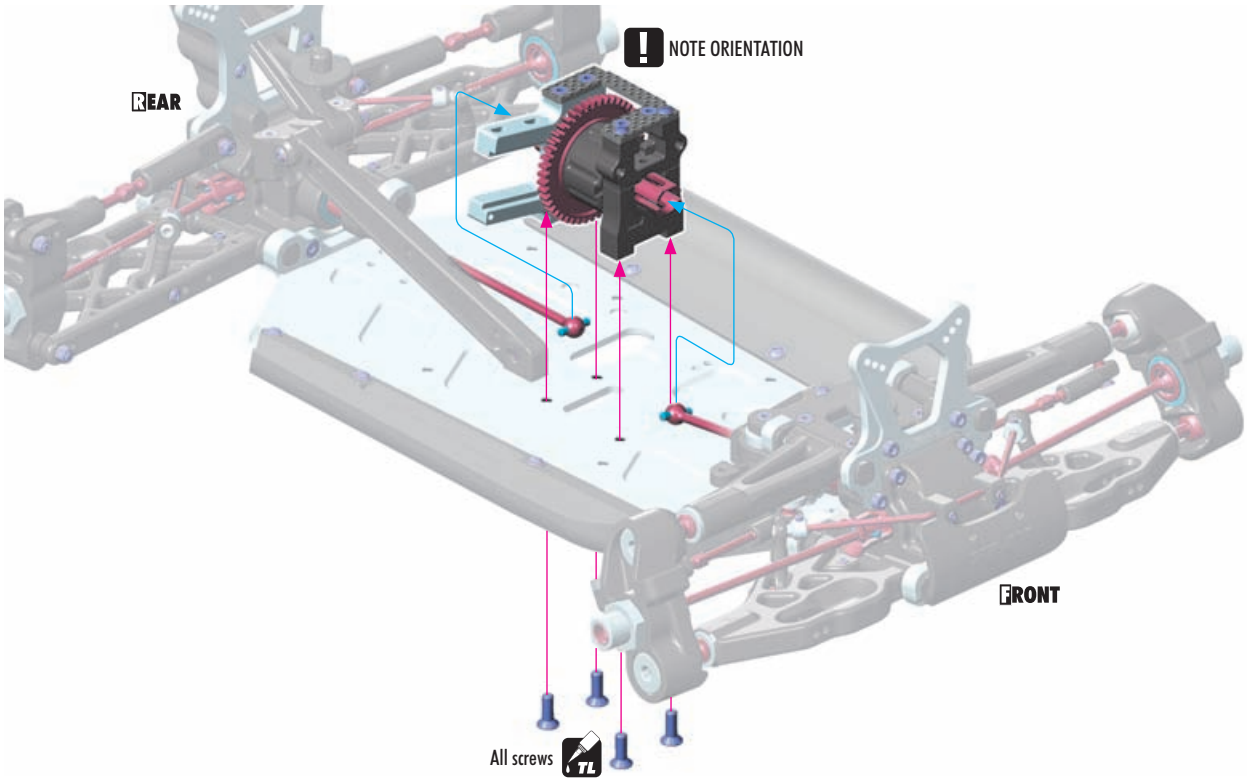

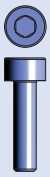

908312
SCH M3x12

908412
SCH M4x12

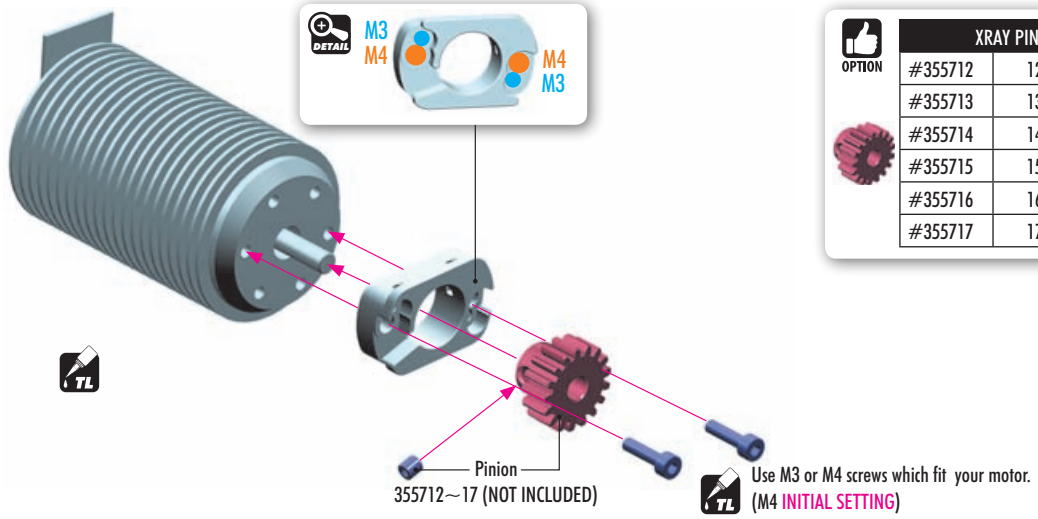

OPTION

XRAY PINION GEAR		
#355712	12T	OPTION
#355713	13T	OPTION
#355714	14T	OPTION
#355715	15T	OPTION
#355716	16T	OPTION
#355717	17T	OPTION

908314
SCH M3x14

961032
S 3.2

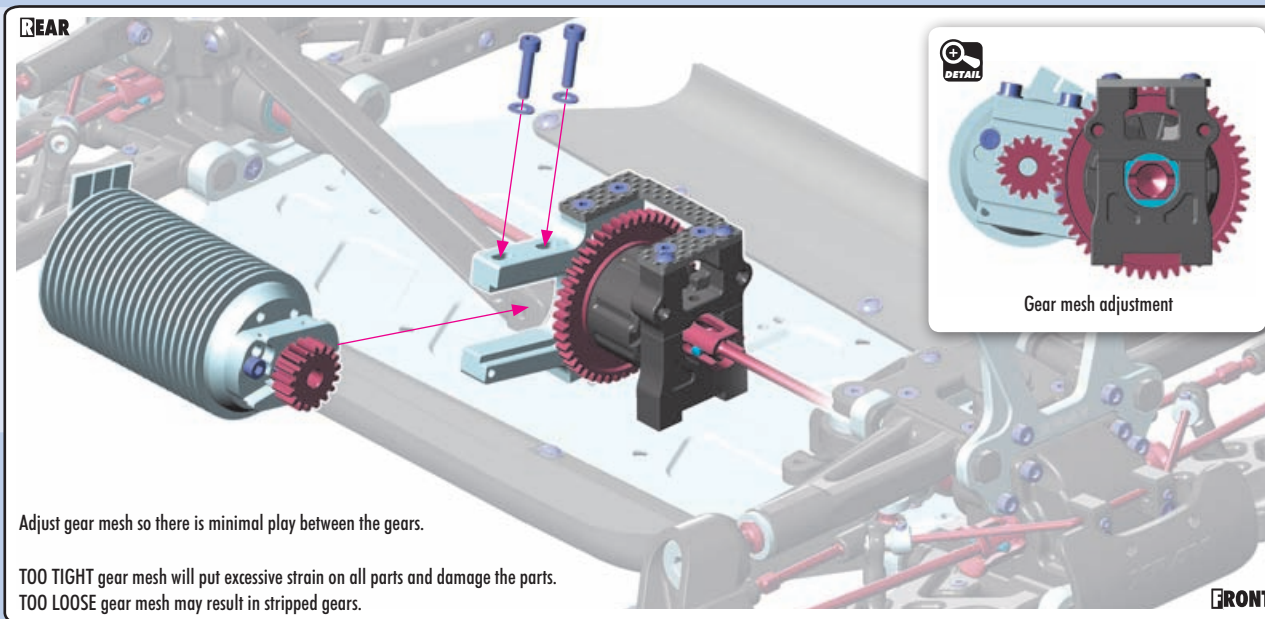

Adjust gear mesh so there is minimal play between the gears.

TOO TIGHT gear mesh will put excessive strain on all parts and damage the parts.
TOO LOOSE gear mesh may result in stripped gears.

10. RADIO CASE

902308
902312
306310
907206
Servo Grommet (NOT INCLUDED)
Servo Screw (NOT INCLUDED)
Speed Controller (NOT INCLUDED)
356200
352460
Steering Servo (NOT INCLUDED)
902314
LiPo Battery Pack (NOT INCLUDED)
352670
902308
902312
302610
352670
336000
356119
Receiver (NOT INCLUDED)
960030
356120
960040
356194
356194
356160
356152
960040
356197
903412
336000
903410
356152
903410

OPTION HUDY	ALU SERVO HORNS		
	#293501	23T	OPTION
	#293502	24T	OPTION
	#293503	25T	OPTION

OPTION HUDY	CLAMP ALU SERVO HORNS		
	#293407	23T	OPTION
	#293408	24T	OPTION
	#293409	25T	OPTION

BAG 10

30 2610	ADJ. TURNBUCKLE L/R 40 MM - HUDY SPRING STEEL (2)	35 6200	BRAKE/THROTTLE ARMS & STEERING SERVO ARMS - SET
30 6310	ANTENNA TUBE (2)	38 9135	CONNECTING CABLE RECEIVER/BATT. PACK (OPTION)
33 6000	COMPOSITE RECEIVER CASE - V2		
33 6060	RECEIVER SWITCH - SET (OPTION)	90 2308	HEX SCREW SH M3x8 (10)
35 2460	PIVOT BALL 5.8 (10)	90 2312	HEX SCREW SH M3x12 (10)
35 2670	SERVO BALL JOINT 5.8MM (4)	90 2314	HEX SCREW SH M3x14 (10)
35 6119	GRAPHITE RECEIVER CASE TOP PLATE	90 3410	HEX SCREW SFH M4x10 (10)
35 6120	STEERING SERVO MOUNT - SET	90 3412	HEX SCREW SFH M4x12 (10)
35 6152	COMPOSITE BATTERY PLATE	90 7206	SCREW PHILLIPS 2x6 (10)
35 6160	VELCRO BATTERY STRAP 20x300MM (2)	96 0030	NUT M3 (10)
35 6194	ALU MOUNT FOR RECEIVER BOX	96 0040	NUT M4 (10)
356197	ALU ECCENTRIC MOUNT FOR RECEIVER BOX		

902312
SH M3x12

TIP Install the pivot balls with Professional Multi Tool (HUDY #183011)

LEFT THREAD
RIGHT THREAD

approx. 24mm
LEFT THREAD
RIGHT THREAD
The length of the linkages varies according to the type of servo.

Use appropriate servo arm:
K - (23T) **H** - (24T) **F** - (25T)

NOTE ORIENTATION

OPTION HUDY	ALU SERVO HORNS		
	#293501	23T	OPTION
	#293502	24T	OPTION
	#293503	25T	OPTION

CLAMP ALU SERVO HORNS		
#293407	23T	OPTION
#293408	24T	OPTION
#293409	25T	OPTION

902312
SH M3x12

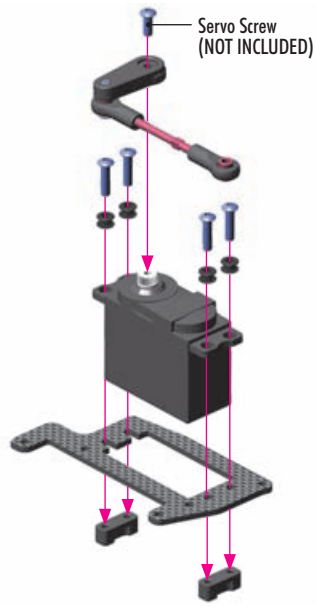

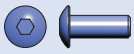

902308
SH M3x8

907206
2x6

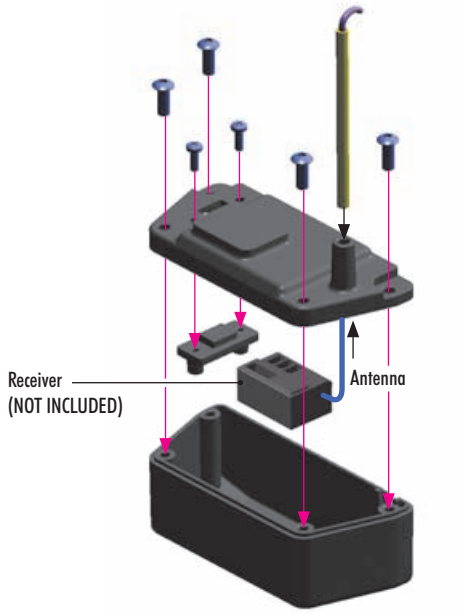

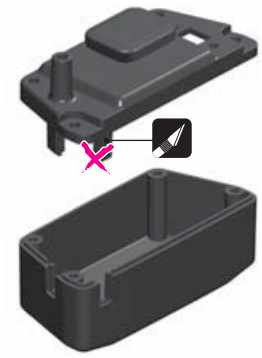

If the receiver box has 2 different-size openings for cable entry (narrow and wider), cut away the tab for the appropriate opening to allow the cables to fit properly.

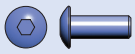

902308
SH M3x8

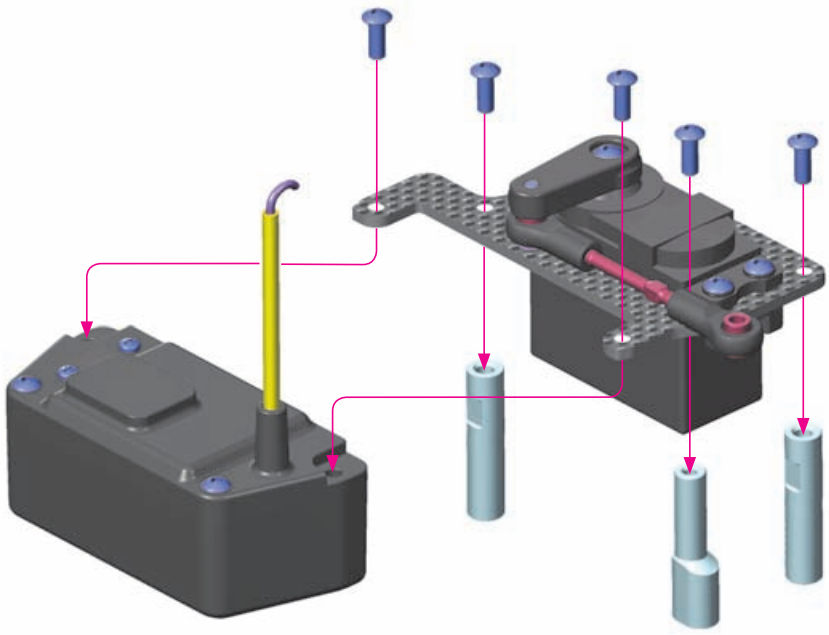

10. RADIO CASE

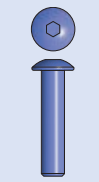
902314
SH M3x14

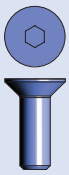
903412
SFH M4x12


960030
N M3

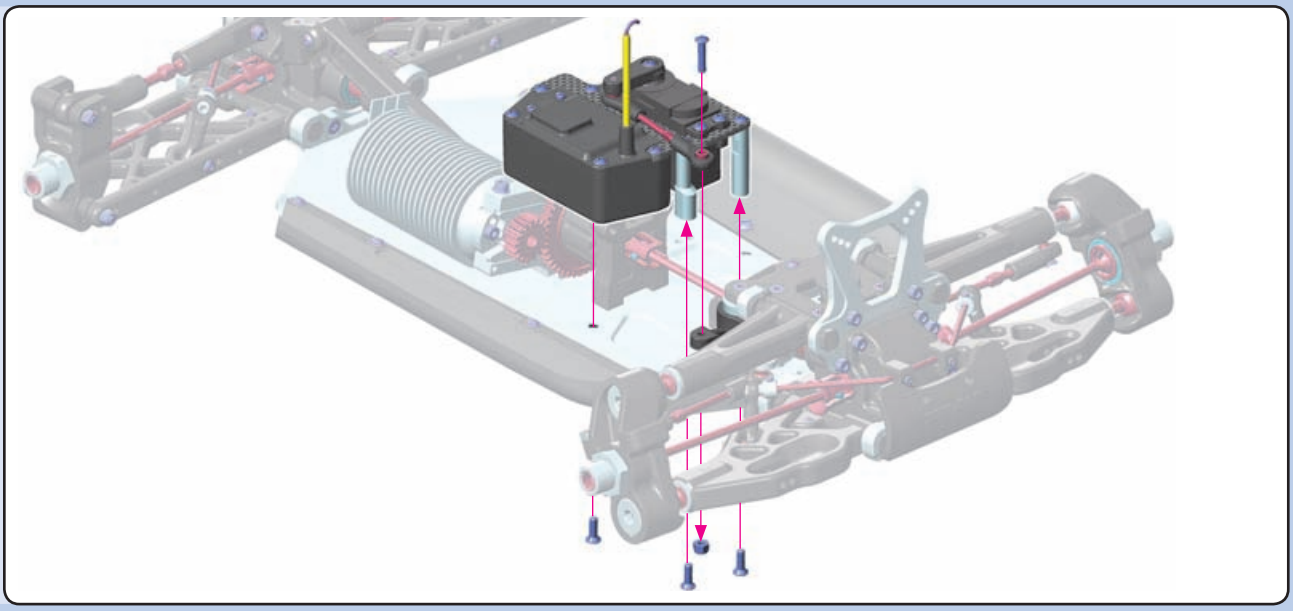

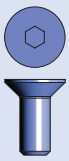
903410
SFH M4x10


960040
N M4

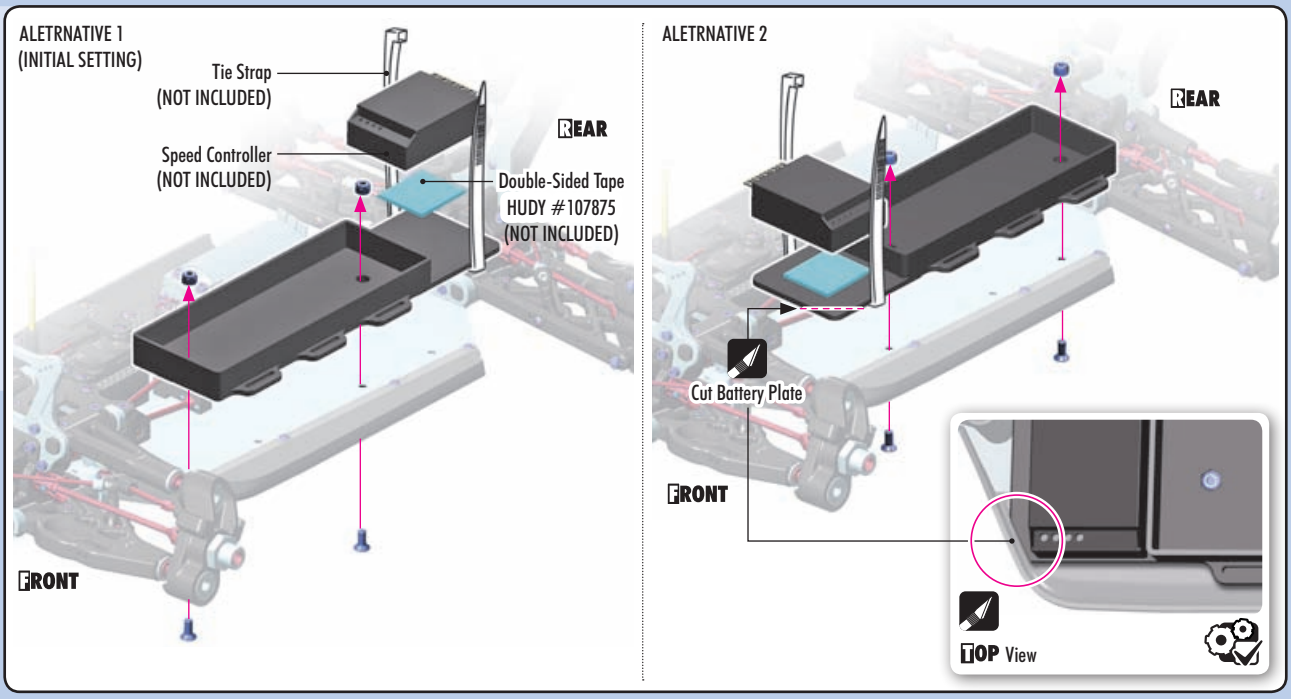

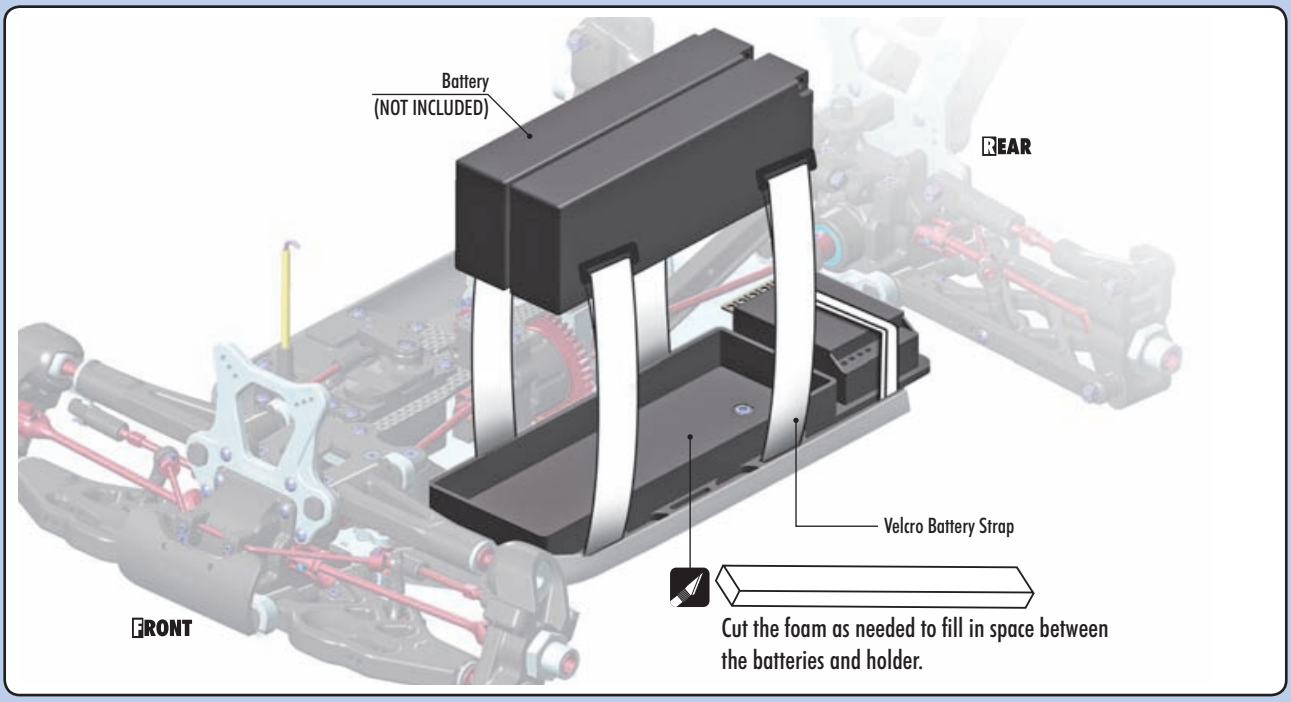

11. SHOCK ABSORBERS

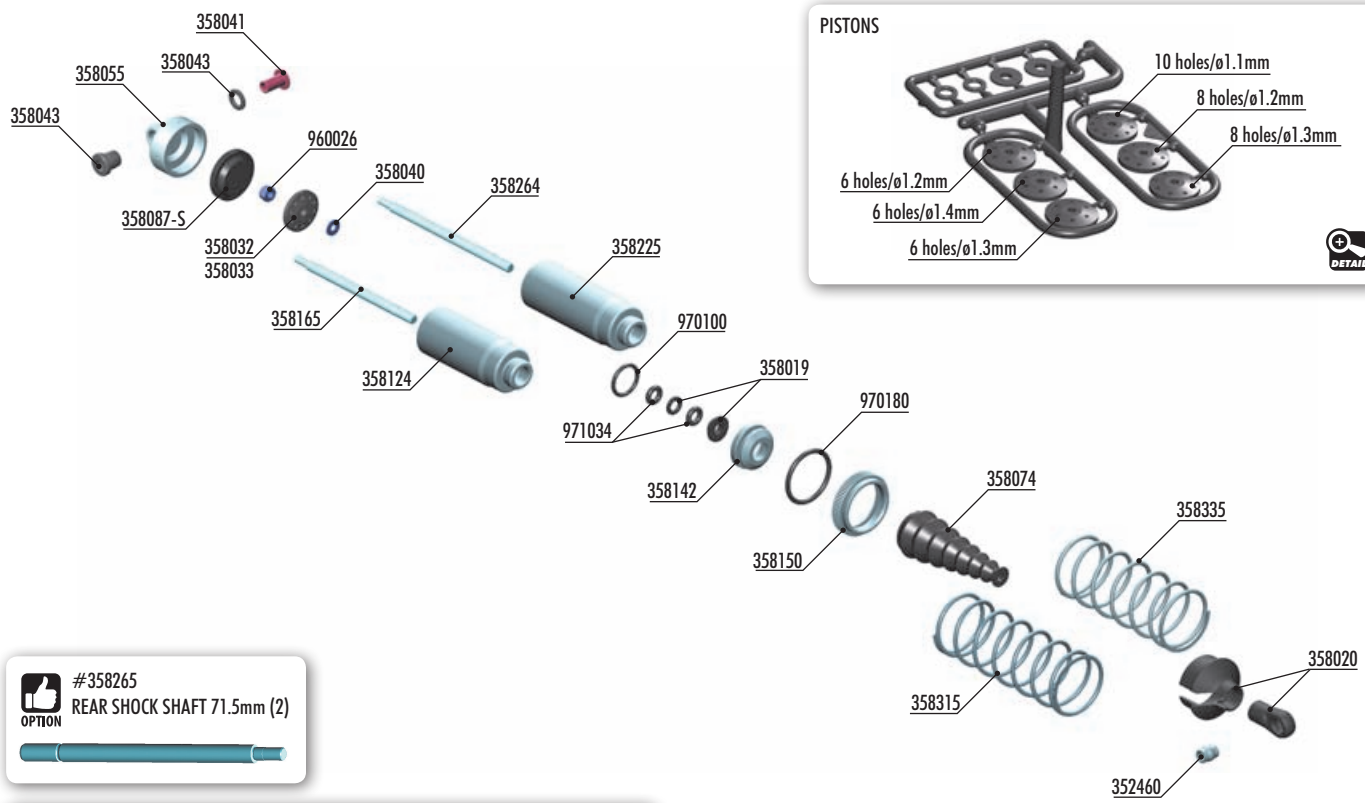

OPTION

#358265
REAR SHOCK SHAFT 71.5mm (2)

OPTION

#358027 PISTON 5-HOLE (1.5mm) & 2-HOLE (1.0mm) (4)
#358028 PISTON 6-HOLE (1.3mm) & 2-HOLE (1.1mm) (4)
#308029 PISTON 6-HOLE (1.4mm) & 2-HOLE (1.1mm) (4)
#358030 PISTON 8-HOLE (1.2mm) & 2-HOLE (1.2mm) (4)
#358031 PISTON 8-HOLE (1.3mm) & 2-HOLE (1.2mm) (4)

OPTION

FRONT LINEAR SPRINGS				
#358182	C=0.65	White	SHORT	OPTION
#358183	C=0.70	Grey	SHORT	OPTION
#358184	C=0.75	Silver	SHORT	OPTION
#358185	C=0.80	Grey-Blue	SHORT	OPTION
#358186	C=0.86	Blue	SHORT	OPTION
#358187	C=0.92	Violet	SHORT	OPTION
#358188	C=0.98	Purple	SHORT	OPTION

REAR LINEAR SPRINGS				
#358282	C=0.47	White	LONG	OPTION
#358283	C=0.50	Grey	LONG	OPTION
#358284	C=0.53	Silver	LONG	OPTION
#358285	C=0.57	Grey-Blue	LONG	OPTION
#358286	C=0.61	Blue	LONG	OPTION
#358287	C=0.65	Violet	LONG	OPTION
#358288	C=0.70	Purple	LONG	OPTION

OPTION

SHOCK SPRINGS				
#358315	C=0.77-0.80	3 DOTS	FRONT	INCLUDED
#358316	C=0.80-0.83	4 DOTS	FRONT	OPTION
#358317	C=0.83-0.86	5 DOTS	FRONT	OPTION
#358335	C=0.68-0.70	3 DOTS	REAR	INCLUDED
#358336	C=0.70-0.73	4 DOTS	REAR	OPTION

OPTION

FRONT & REAR PROGRESSIVE SPRINGS				
#358174	C=0.7-0.8	Grey	SHORT	OPTION
#358274	C=0.5-0.6	Grey	MEDIUM	OPTION
#358275	C=0.65-0.7	1 STRIPE	MEDIUM	OPTION
#358276	C=0.7-0.75	2 STRIPES	MEDIUM	OPTION
#358277	C=0.72-0.8	3 STRIPES	MEDIUM	OPTION
#358278	C=0.75-0.83	4 STRIPES	MEDIUM	OPTION

REAR PROGRESSIVE SPRINGS				
#358279	C=0.55-0.63	2 STRIPES	LONG	OPTION
#358280	C=0.6-0.68	3 STRIPES	LONG	OPTION
#358281	C=0.65-0.7	4 STRIPES	LONG	OPTION

OPTION

#104005
HUDY AIR VAC - VACUUM PUMP - 1/8 OFF-ROAD

OPTION

#358054
XB8 ALU SHOCK CAP NUT WITH VENT HOLE - BLACK COATED (2)

BAGS

11.1

11.2

352460	PIVOT BALL 5.8 - V3 (10)
358019	COMPOSITE SET OF SHIMS FOR SHOCKS - V2 (2)
358020	COMPOSITE SHOCK PARTS
358032	SHOCK PISTON SET 8-HOLE (1.2; 1.3) 10-H. (1.1MM) - DELRIN - V2
358033	COMPOSITE SHOCK 6-HOLE PISTON SET (1.2; 1.3; 1.4MM) - DELRIN - V2
358040	HARDENED SHOCK SHIMS (4)
358041	STEEL SHOCK BUSHING (2)
358043	COMPOSITE SHOCK BUSHING & SHIM (2+2)
358055	ALU SHOCK CAP NUT WITH 4 VENT HOLES - BLACK COATED (2)
358074	FOLDING SHOCK BOOT (4)
358087-S	SHOCK RUBBER MEMBRANE CELL - SOFT (4)
358124	ALU FRONT SHOCK BODY - HARD COATED (2)
358142	ALU SHOCK BODY NUT FOR SHOCK BOOT (2)
358150	ALU SHOCK BODY ADJ. NUT (2)
358165	FRONT SHOCK SHAFT 61mm (2)
358225	ALU REAR SHOCK BODY - HARD COATED (2)
358264	REAR SHOCK SHAFT 67.5mm (2)
358315	XRAY FRONT SPRING 69MM - 3 DOTS (2)
358335	XRAY REAR SPRING 85MM - 3 DOTS
960026	NUT M2.5 - SHORT (10)
970100	O-RING 10 x 1.5 (10)
970180	O-RING 18 x 1.8 (10)
971034	SILICONE O-RING 3.5x2 (10)


358040
S 2.5x6x0.5


960026
N M2.5

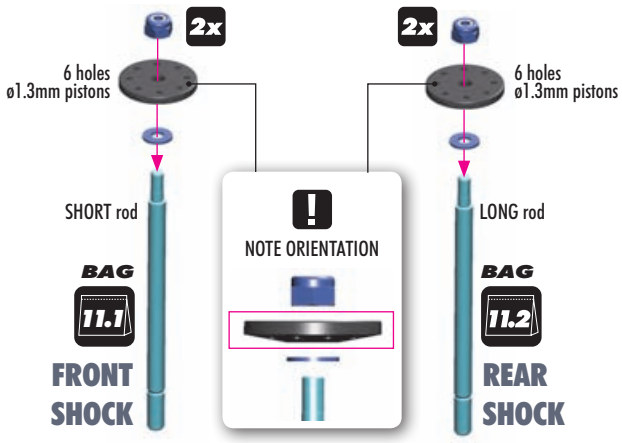

OPTION
#358265
REAR SHOCK SHAFT 71.5mm (2)

OPTION
#358027 PISTON 5-HOLE (1.5mm) & 2-HOLE (1.0mm) (4)
#358028 PISTON 6-HOLE (1.3mm) & 2-HOLE (1.1mm) (4)
#308029 PISTON 6-HOLE (1.4mm) & 2-HOLE (1.1mm) (4)
#358030 PISTON 8-HOLE (1.2mm) & 2-HOLE (1.2mm) (4)
#358031 PISTON 8-HOLE (1.3mm) & 2-HOLE (1.2mm) (4)

DETAIL

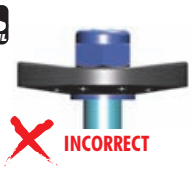

DO NOT OVERTIGHTEN

The self-locking nut is overtightened, causing distortion of the piston. This will negatively affect the free movement of the piston in the shock body.

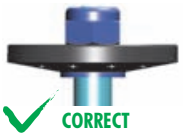

TIGHTEN GENTLY

The self-locking nut is gently tightened. The piston remains undistorted and fits inside the shock body perfectly, ensuring smooth movement of the piston.

SET-UP BOOK
SHOCK DAMPING
SHOCK PISTONS


970100
O 10x1.5


971034
O 3.4x2

2x FRONT SHOCKS (SHORT)

2x REAR SHOCKS (LONG)

There are two different thickness shims, use them as shown. Use the same procedure when building both front and rear shocks.

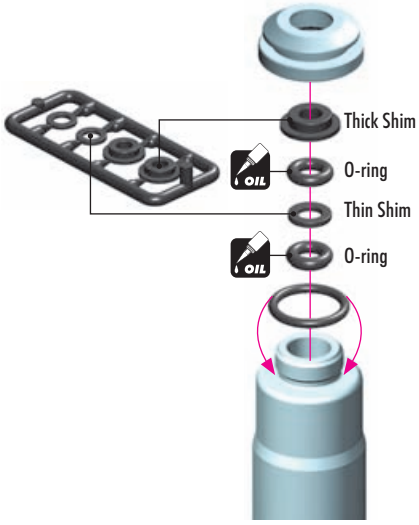

2x
FRONT SHOCKS

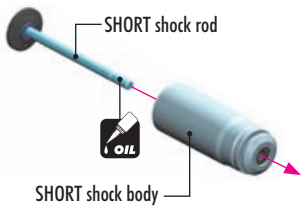

2x
REAR SHOCKS

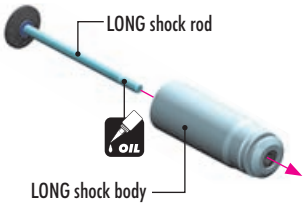

EXTREMELY IMPORTANT

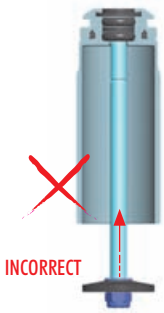

Do not push the shock rod straight through the lower shock body assembly; O-ring damage may result.

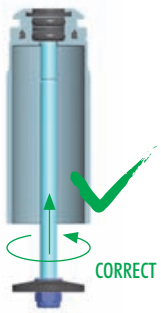

Twist the shock rod through the lower shock body assembly.

970180
O 18x1.8

2x FRONT SHOCKS

2x REAR SHOCKS

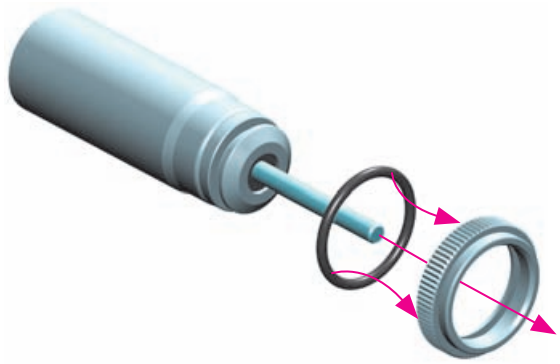

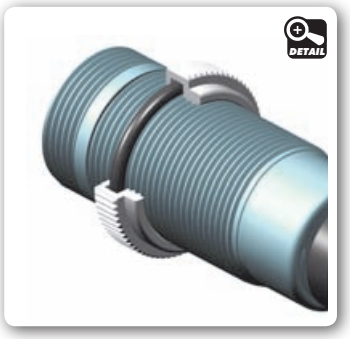

2x FRONT SHOCKS

2x REAR SHOCKS

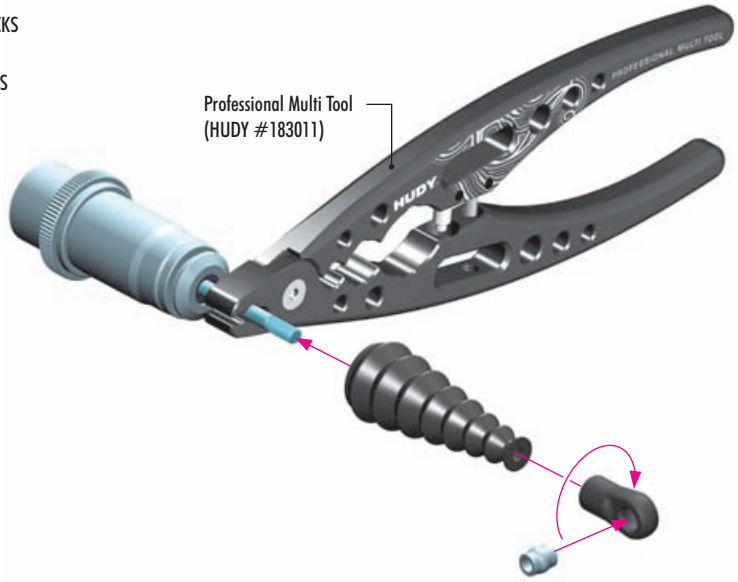

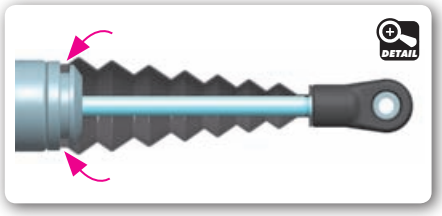

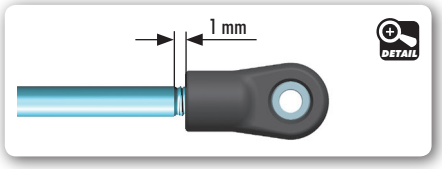

DEFAULT SHOCK REBOUND SETTING 0% (LOW REBOUND)

Follow the steps below to set the shock rebound to the default setting of 0%.

2x FRONT (SHORT)
Oil 450cSt

2x REAR (LONG)
Oil 350cSt

❶ Extend the shock shaft completely. Fill the shock body with the shock oil. For the FRONT shocks (short) use 450cSt oil. For the REAR shocks (long) use 350cSt oil.

SET-UP BOOK
SHOCK OIL

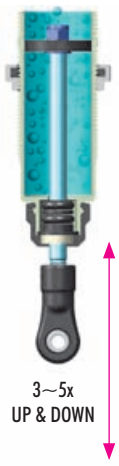

❷ Move the shock shaft up and down a few times to release the air bubbles trapped beneath the piston.

❸ Orient the filled shock vertically for several minutes with the shock shaft fully extended. The remaining air bubbles will release.

❹ Install the shock membrane into the groove in the upper shock cap.

❺ Gently place the shock cap assembly onto the filled shock body. Excess oil will spill from the shock. Screw the shock cap onto the body by only a few turns.

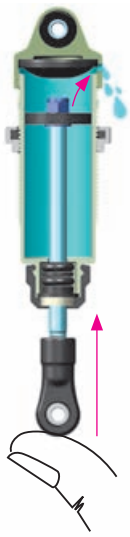

❻ Gently push the shock shaft completely into the shock body. Excess oil will flow through the hole in the shock cap.

❼ Keep the shock shaft pushed in the shock body and tighten the shock cap completely.
The rebound will be at approximately 0%.

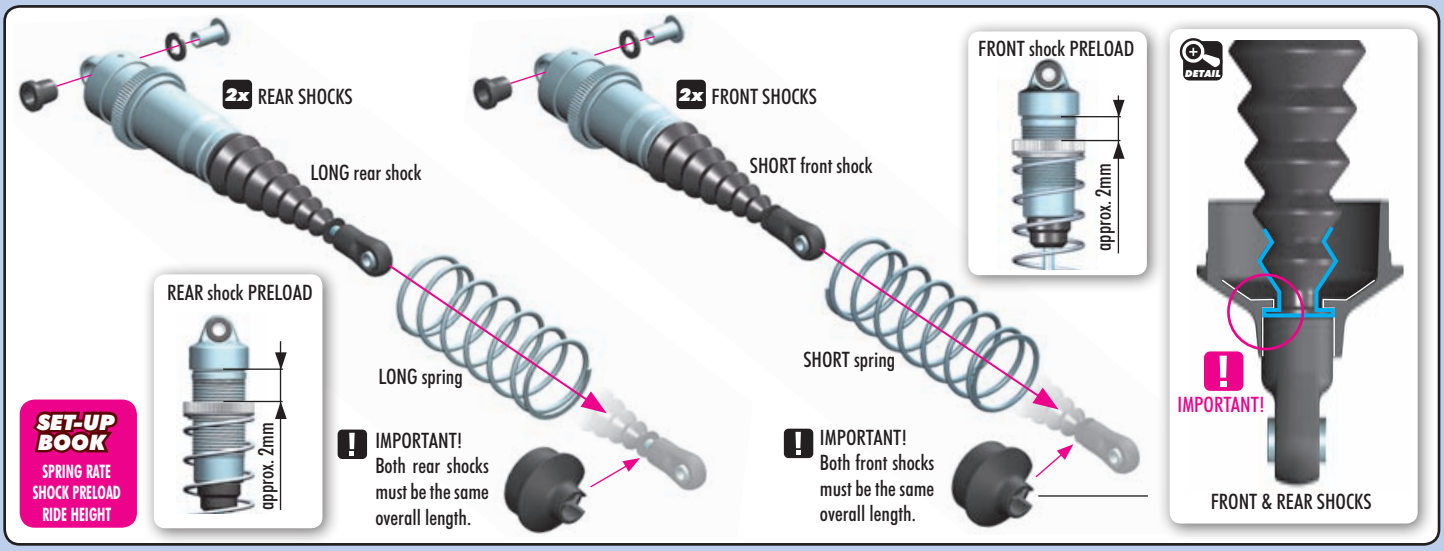

TIP ALTERNATE SHOCK REBOUND SETTING (50% AND 100%)

The default shock rebound setting is 0% (as described on page 40).
Alternatively, you may set the shock rebound setting to 50% or 100% as described below. Remove the shock springs before performing shock rebound adjustment.

SETTING THE SHOCK REBOUND TO 50% (MEDIUM REBOUND)

REMOVE SHOCK CAP

❶ Extend the shock shaft completely and remove the shock cap.

❷ Fill the shock body with shock oil up to the top. Make sure to use same viscosity shock oil as is in the shock.

❸ Orient the filled shock vertically for several minutes with the shock shaft fully extended. The remaining air bubbles will release.

HALF TIGHTEN

❹ Gently place the shock cap assembly onto the filled shock body. Excess oil will spill from the shock.

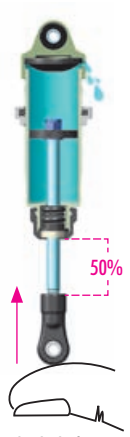

❺ Push the shock shaft 50% into the shock body. Excess oil will bleed thgrough the hole in the shock cap.

TIGHTEN FULLY

❻ Keep the shock shaft pushed 50% into the shock body and tighten the shock cap completely.
The rebound will be at approximately 50%.

SETTING THE SHOCK REBOUND TO 100% (HIGH REBOUND)

REMOVE SHOCK CAP

❶ Extend the shock shaft completely and remove the shock cap.

❷ Fill the shock body with shock oil up to the top. Make sure to use same viscosity shock oil as is in the shock.

❸ Orient the filled shock vertically for several minutes with the shock shaft fully extended. The remaining air bubbles will release.

TIGHTEN FULLY

❹ Gently place the shock cap assembly onto the filled shock body. Keep the shock shaft extended 100% from the shock body and tighten the shock cap completely.
The rebound will be at approximately 100%.

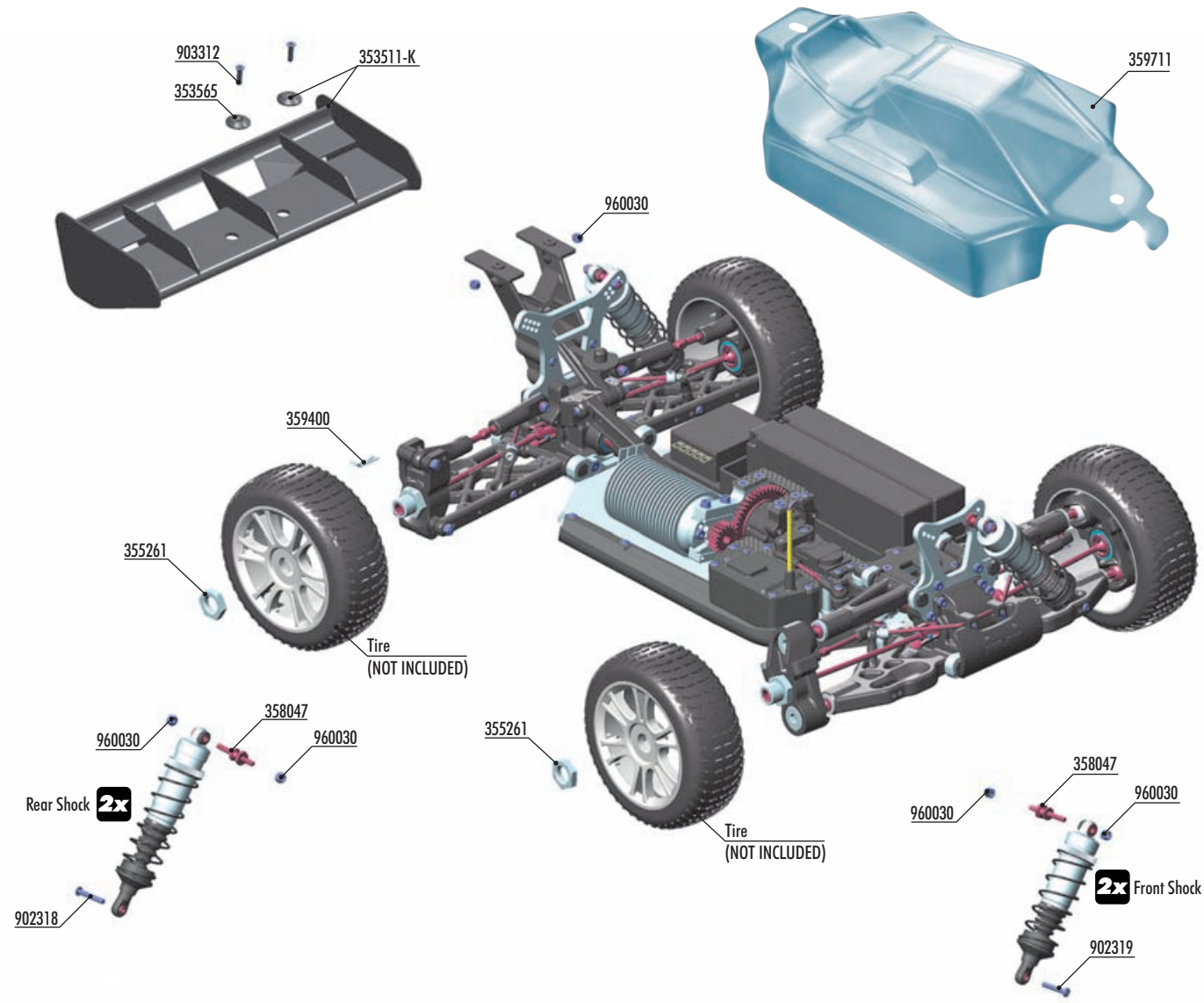

OPTION

XRAY STARBURST WHEELS		
#359808	PINK	OPTION
#359809	YELLOW	OPTION

OPTION

WHEEL NUTS		
#355261	OPEN	INCLUDED
#293560	COVERED	OPTION
#355265	COVERED	OPTION

OPTION

WING SHIMS		
#353565	COMPOSITE	INCLUDED
#293561	ALU	OPTION
#293561-0	ALU	OPTION
#353561	ALU	OPTION

OPTION

#359712
BODY HIGH-SPEED - LIGHTWEIGHT

OPTION

WINGS		
#353511-K	BLACK	INCLUDED
#353511	WHITE	OPTION
#353511-Y	YELLOW	OPTION
#353512	LEXAN®	OPTION

BAG 12

35 3511-K	XB8 REAR WING - BLACK
35 3565	COMPOSITE REAR WING SHIM - BLACK (2)
35 5261	WHEEL NUT - RIBBED - HARD COATED (2)
35 8047	STEEL SCREW SHOCK PIVOT BALL WITH HEX (2)
35 9400	BODY CLIP (10)
35 9711	XB8 BODY HIGH-SPEED FOR 1/8 OFF-ROAD BUGGY
90 2318	HEX SCREW SH M3x18 (10)
90 2319	HEX SCREW SH M3x18 - LEFT THREAD (10)
90 3312	HEX SCREW SFH M3x12 (10)
96 0030	NUT M3 (10)

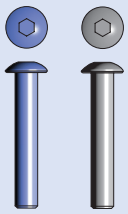

902318
SH M3x18

902319
SH M3x18
LEFT thread

960030
N M3

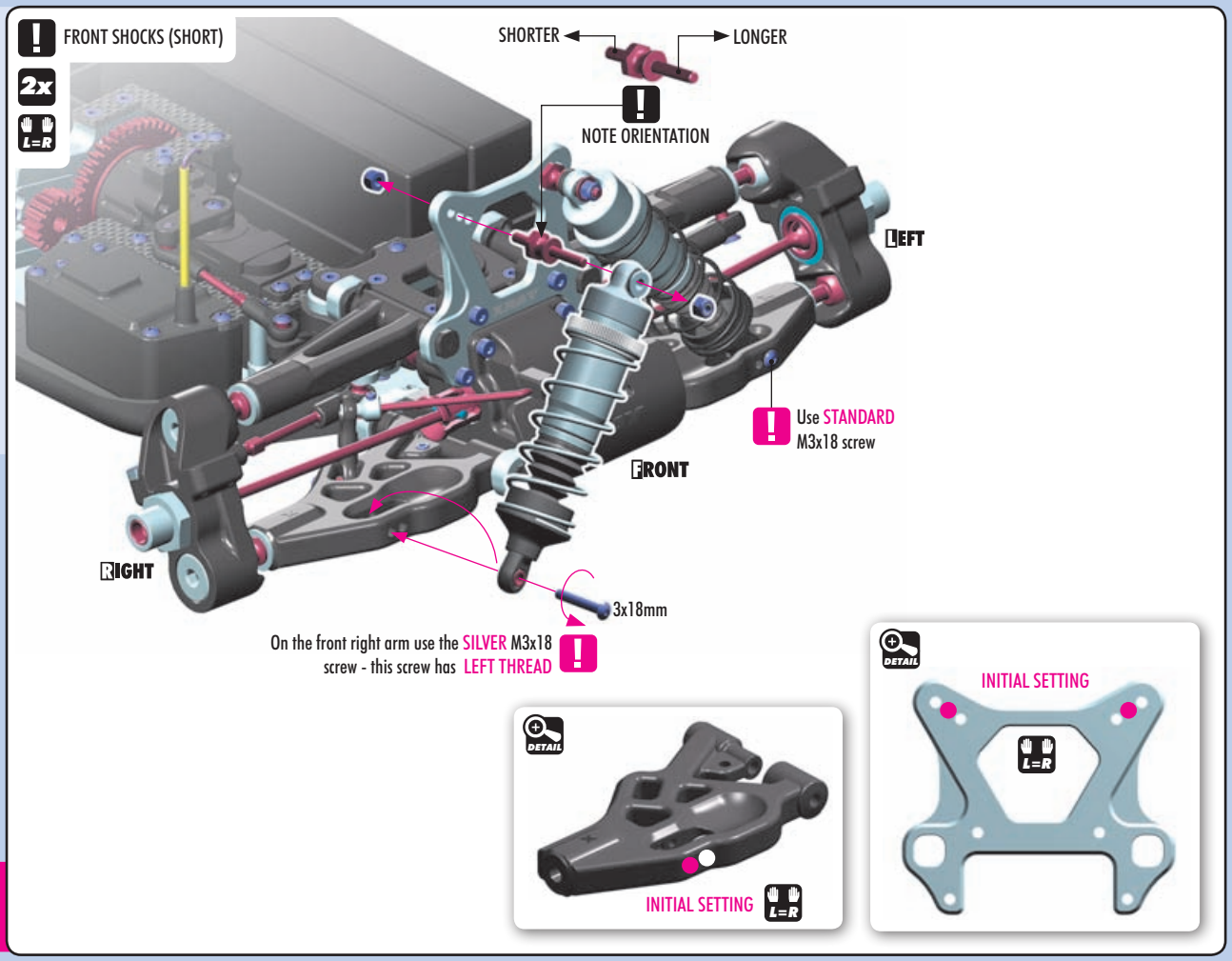

SET-UP BOOK
SHOCK ABSORBERS

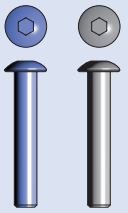

902318
M3x18

902319
SH M3x18
LEFT thread

960030
N M3

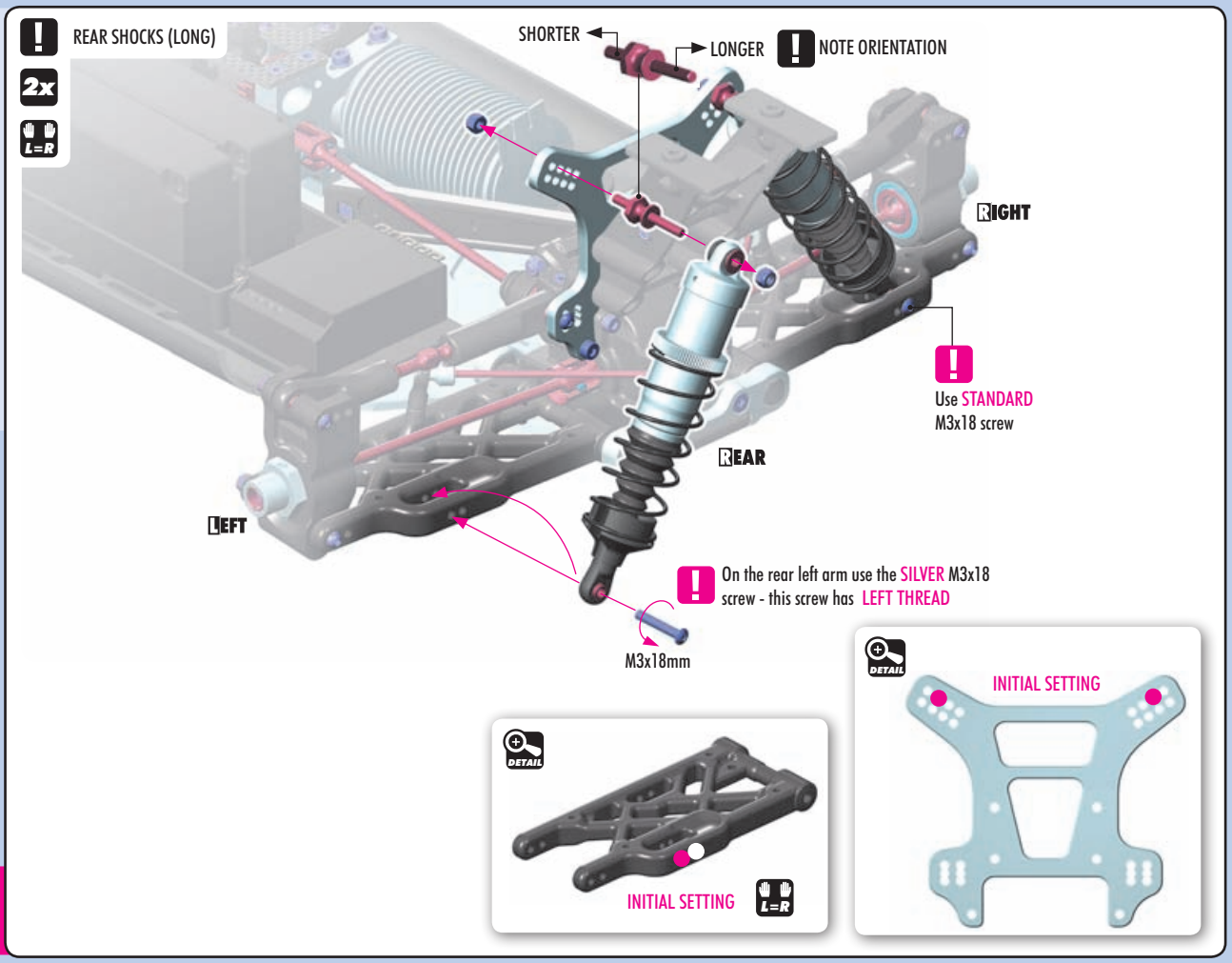

SET-UP BOOK
SHOCK ABSORBERS

903312
SFH M3x12

960030
N M3

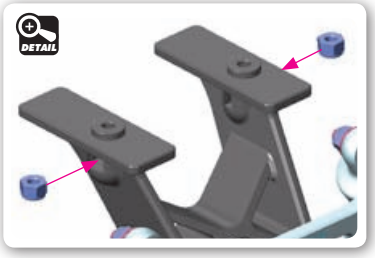

OPTION

WINGS		
#353511-K	BLACK	INCLUDED
#353511	WHITE	OPTION
#353511-Y	YELLOW	OPTION
#353512	LEXAN®	OPTION

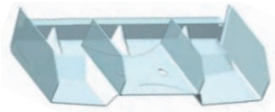

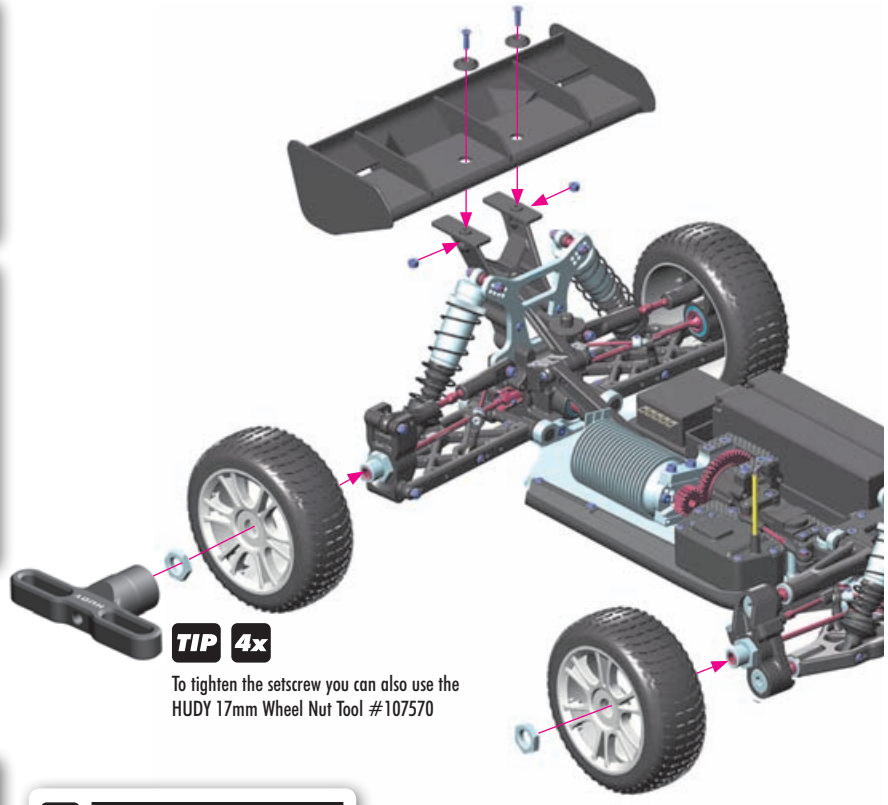

TIP 4x

To tighten the setscrew you can also use the HUDY 17mm Wheel Nut Tool #107570

OPTION

WING SHIMS		
#353565	COMPOSITE	INCLUDED
#293561	ALU	OPTION
#293561-O	ALU	OPTION
#353561	ALU	OPTION

OPTION

WHEEL NUTS		
#355261	OPEN	INCLUDED
#293560	COVERED	OPTION
#355265	COVERED	OPTION

OPTION

XRAY STARBURST WHEELS		
#359808	Pink	OPTION
#359809	Yellow	OPTION

1. Before cutting and making holes on the body, put the unpainted body on the chassis to confirm the mounting position and location for holes and cutouts.
2. Before painting, wash the inside of the body with mild detergent, and then rinse and dry thoroughly.
3. Mask all windows.
4. Apply paint masks as appropriate.
5. Paint the body using paints formulated for polycarbonate bodies.
6. When the paint is dry, remove the masking.
7. Carefully cut out the body using appropriate scissors or cutting tools.
8. When you have finished cutting, peel off the external protective films.

Body Reamer (HUDY #107600)

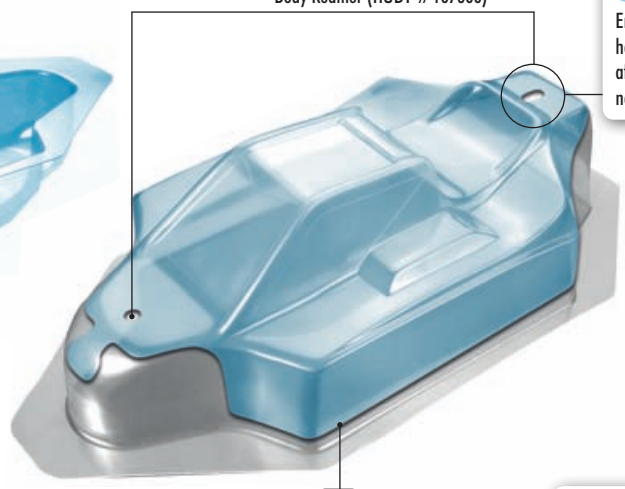

Ensure to make this rear body mount hole oval so in the case of chassis flex after a big jump the body mount will not tear up the hole.

OPTION

#359712
BODY HIGH-SPEED - LIGHTWEIGHT

TIP

To reinforce the body or to fix broken body use #106280 HUDY BODY FIX

13. FRONT C-HUB SUSPENSION

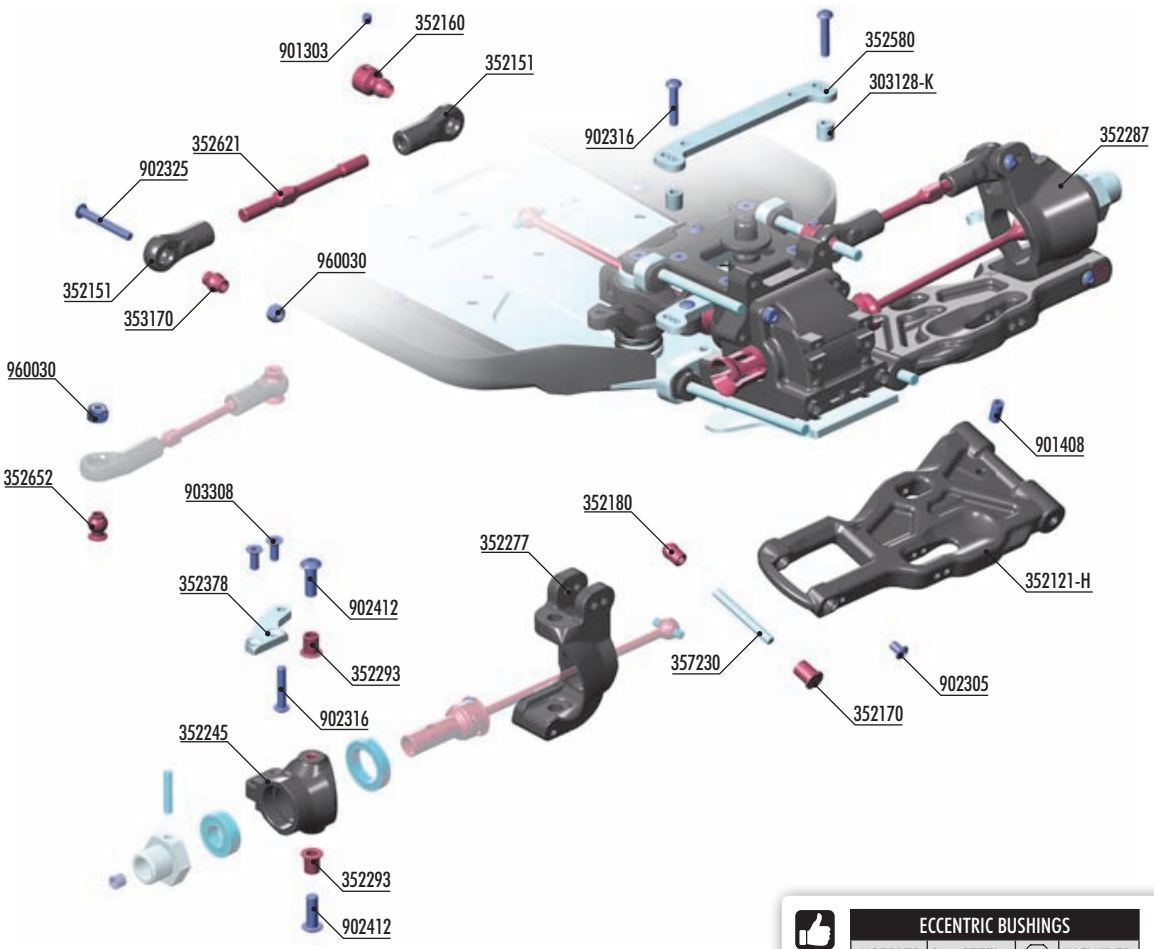

OPTION	ECCENTRIC BUSHINGS			
	#352170	0° - STEEL		INCLUDED
	#352171	1° - STEEL		OPTION

BAG 13

303128-K	ALU SHIM 3x6x6.0MM - BLACK (10)	352293	STEEL BUSHING FOR CASTER BLOCK (2)	901408	HEX SCREW SB M4x8 (10)
352121-H	COMPOSITE FRONT LOWER SUSPENSION ARM - HARD	352378	ALU STEERING PLATE - SWISS 7075 T6 (L+R)	902305	HEX SCREW SH M3x5 (10)
352151	FRONT UPPER ARM BALL JOINT (2) - V2	352580	ALU STEERING PLATE - SWISS 7075 T6	902316	HEX SCREW SH M3x16 (10)
352160	STEEL MOUNTING BALL 6.8MM (2)	352621	ADJ. TURNBUCKLE M5 L/R 58mm 2)	902325	HEX SCREW SH M3x25 (10)
352170	STEEL ECCENTRIC BUSHING 0° (2)	352652	BALL STUD 6.8MM (4)	902412	HEX SCREW SH M4x12 (10)
352180	BALL MOUNT (2)	353170	PIVOT BALL 6.8 (4)	903308	HEX SCREW SFH M3x8 (10)
352245	STEERING BLOCK	357230	FRONT LOWER OUTER PIVOT PIN (2)	960030	NUT M3 (10)
352277	COMPOSITE CASTER BLOCK 16° RIGHT				
352287	COMPOSITE CASTER BLOCK 16° LEFT	901303	HEX SCREW SB M3x3 (10)		

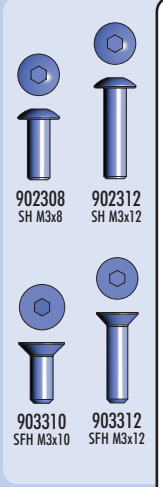

Use this screws from BAG 7 + BAG 13

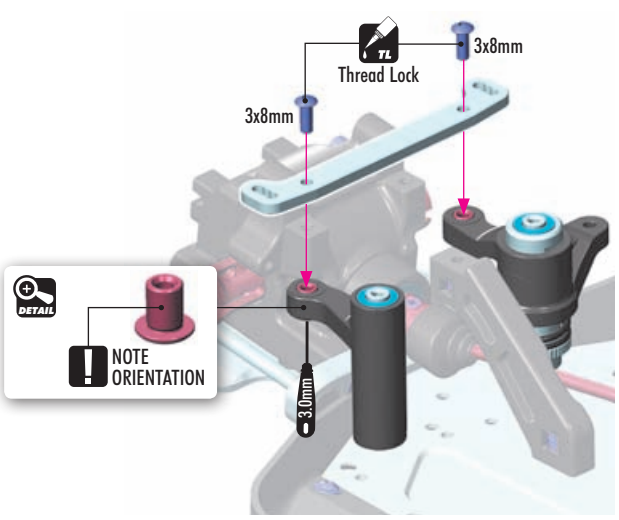

Use this screws from BAG 7 + BAG 13

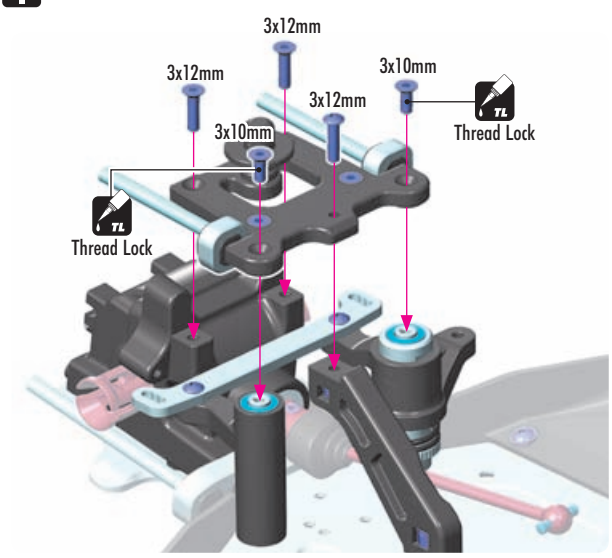

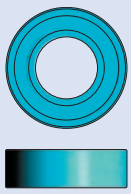
940816
BB 8x16x5


980317
P 3x17


901504
SB M5x4


903308
SFH M3x8

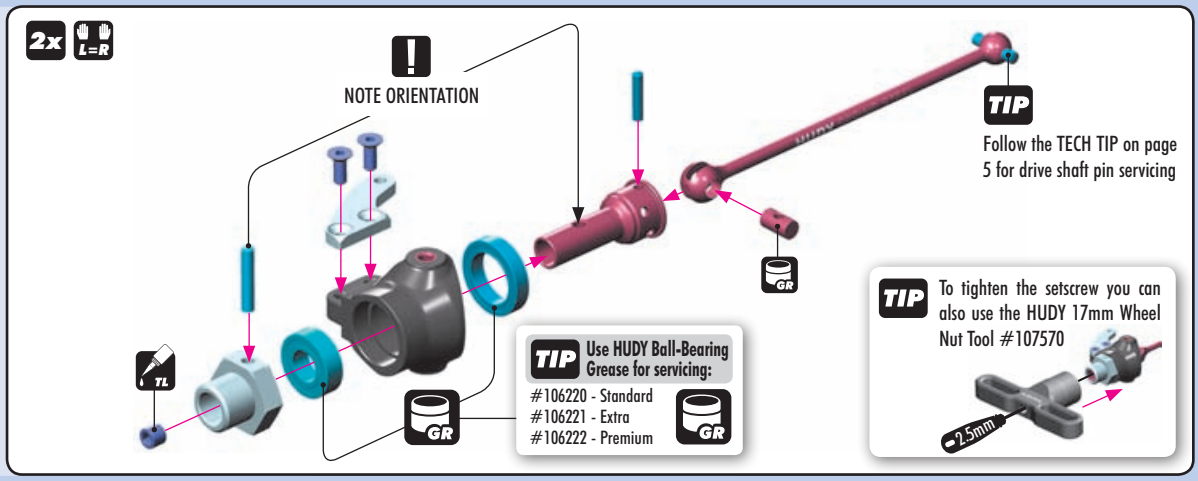


902412
SH M4x12

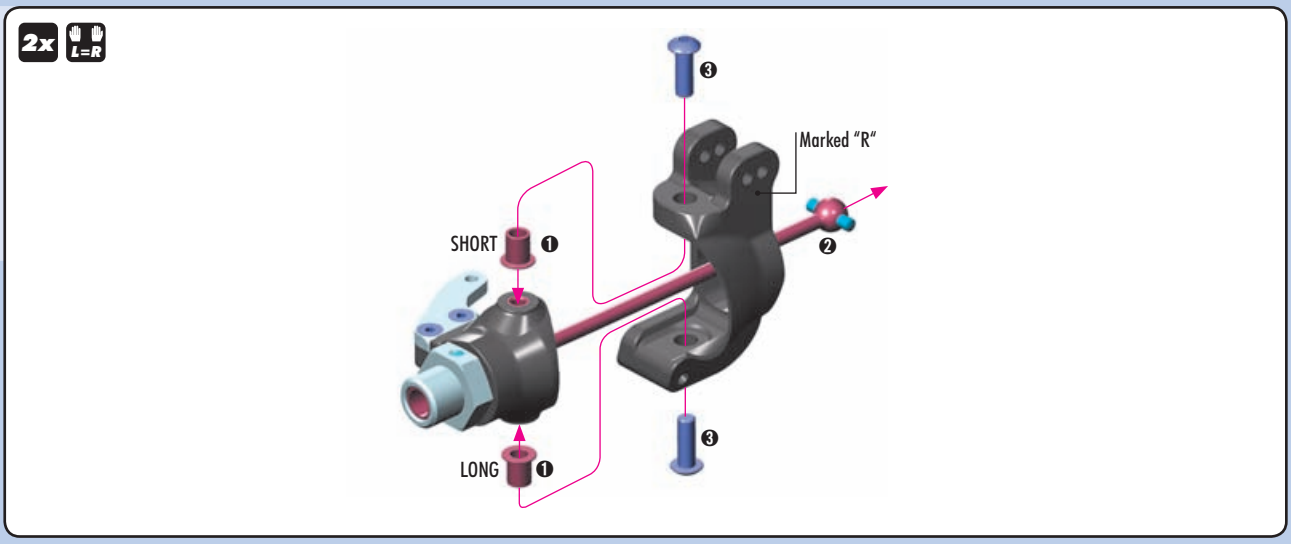


901408
SB M4x8


902305
SH M3x5


902325
SH M3x25


960030
N M3

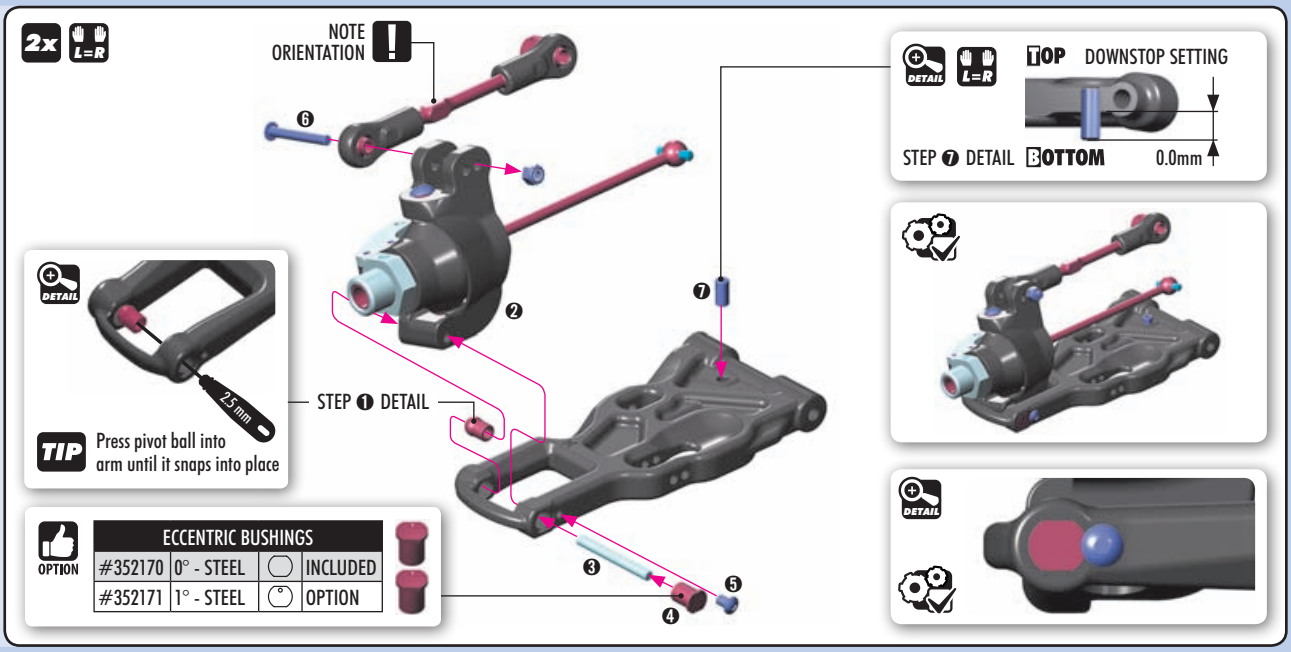

13. FRONT C-HUB SUSPENSION

909395
SS 3.5x45

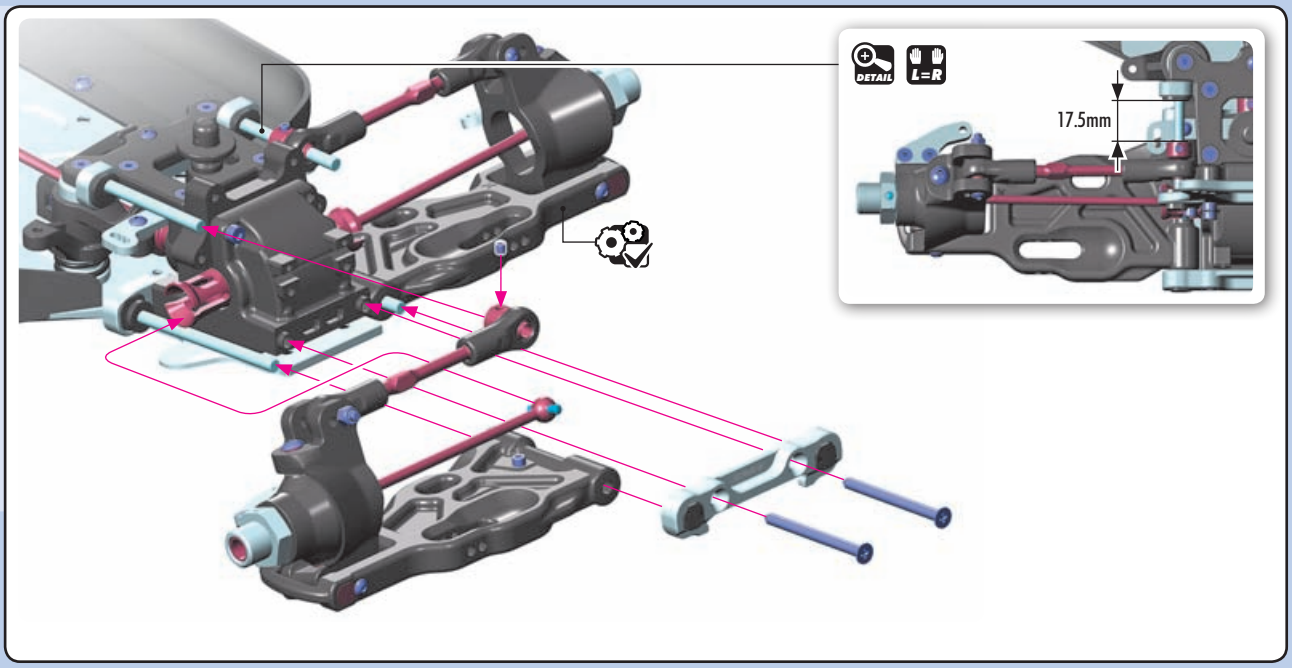

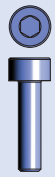

908312
SCH M3x12

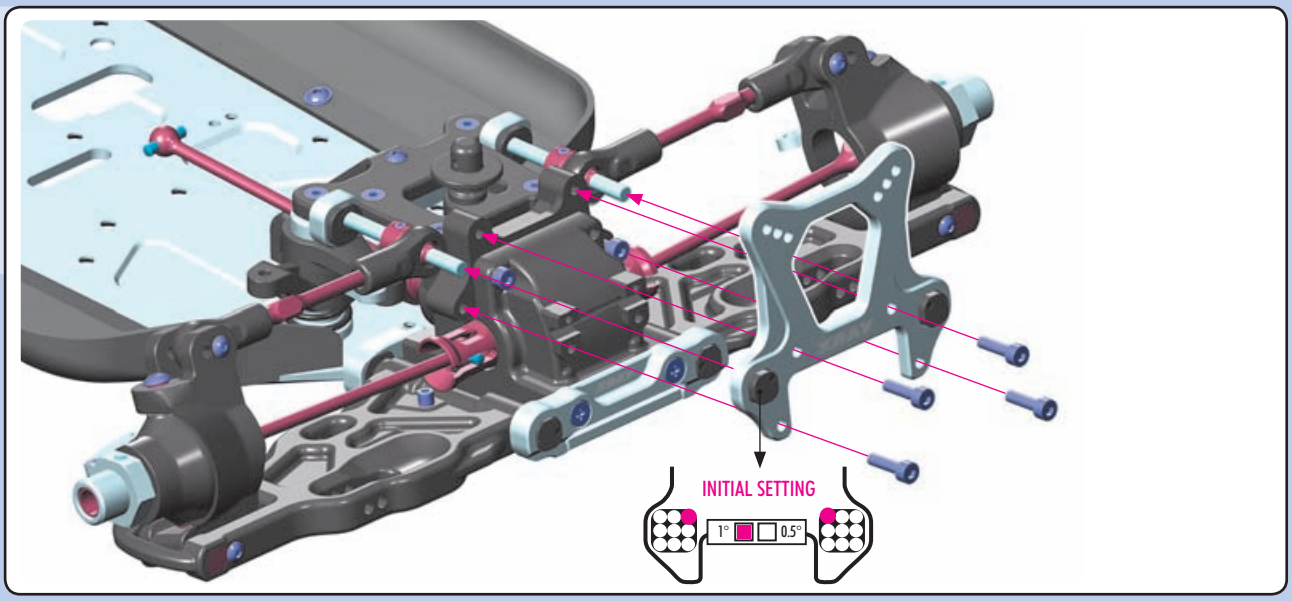

901303
SB M3x3

901305
SB M3x5

902318
SH M3x18

903308
SFH M3x8

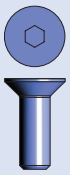

903412
SFH M4x12

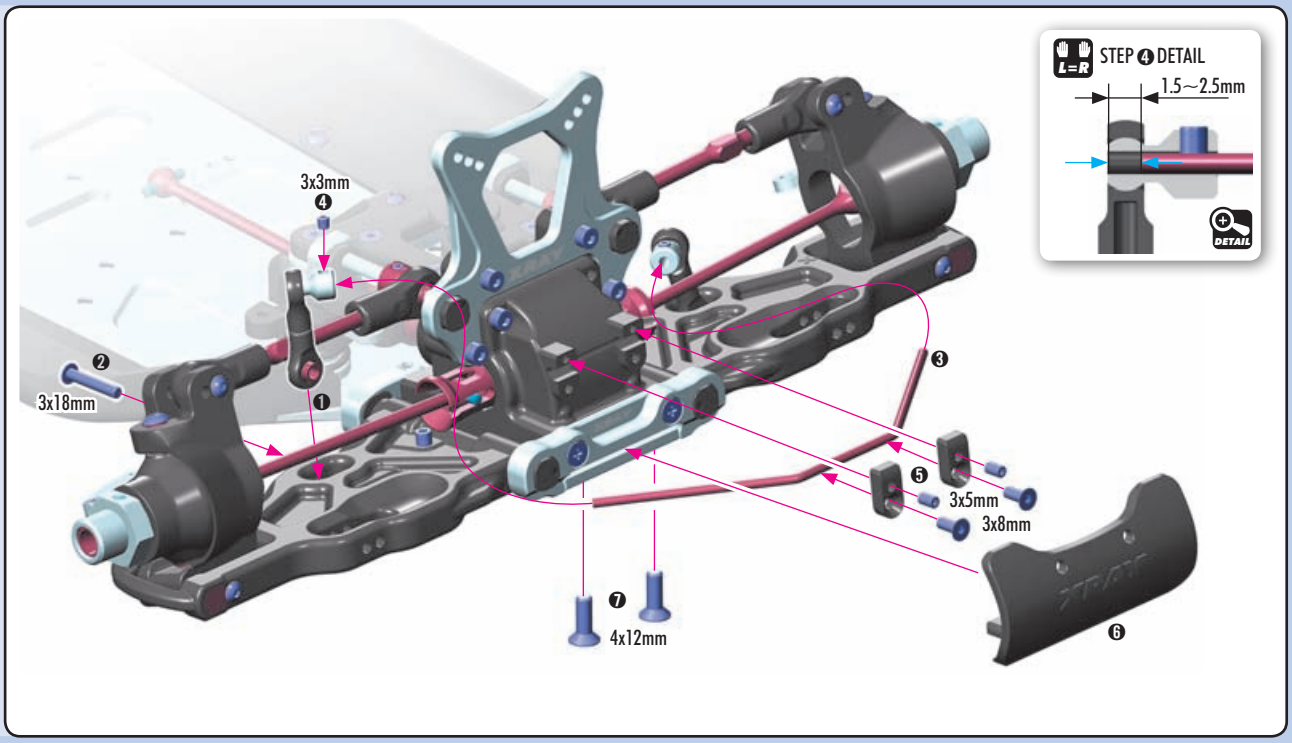

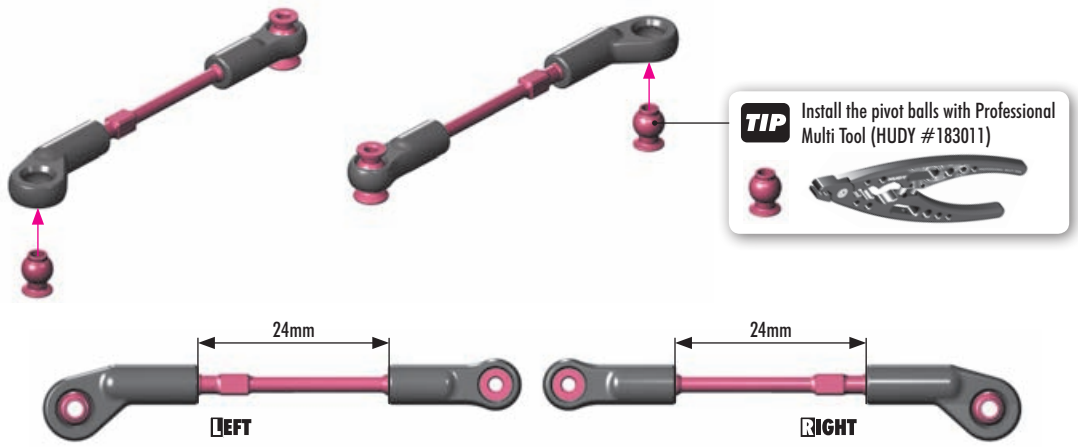
TIP
Install the pivot balls with Professional Multi Tool (HUDY #183011)
24mm
24mm
LEFT
RIGHT


303128-K
SHIM 3x6x6
902316
SH M3x16
960030
N M3

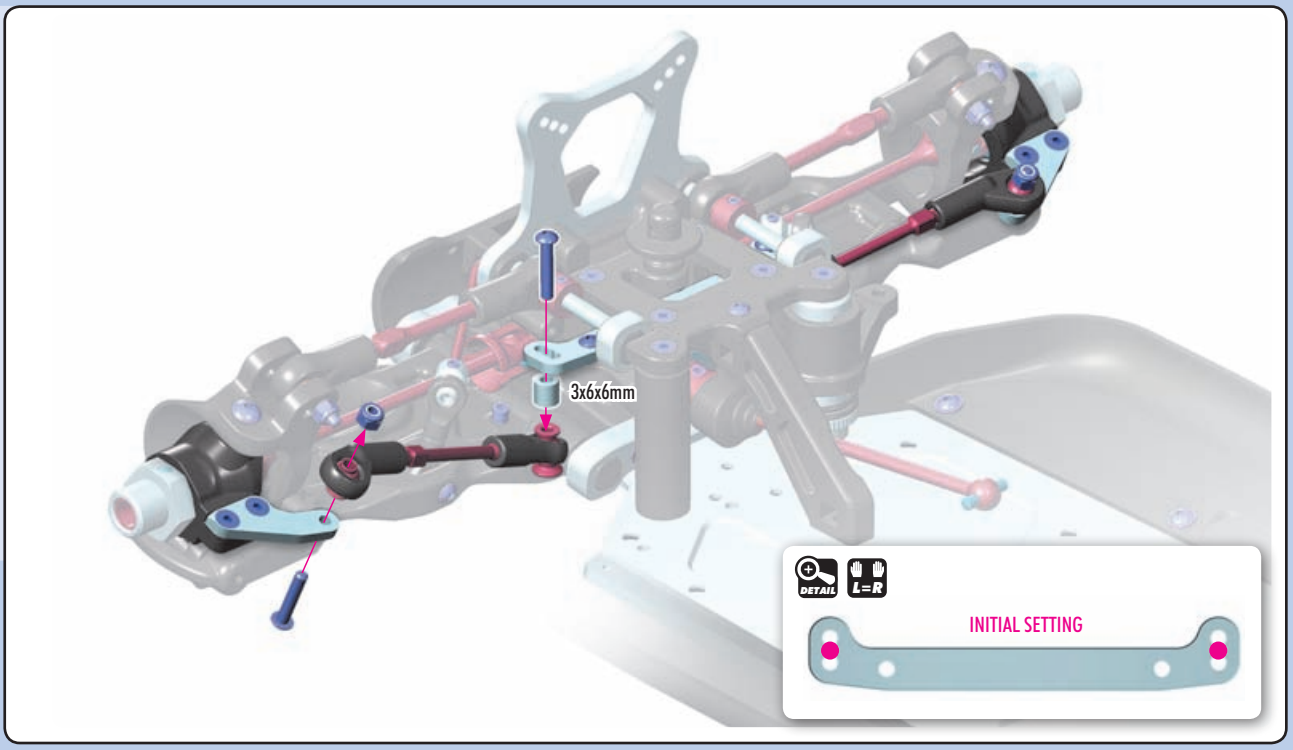
3x6x6mm
DETAIL
L=R
INITIAL SETTING


902318
SH M3x18
902319
SH M3x18
LEFT thread
960030
N M3

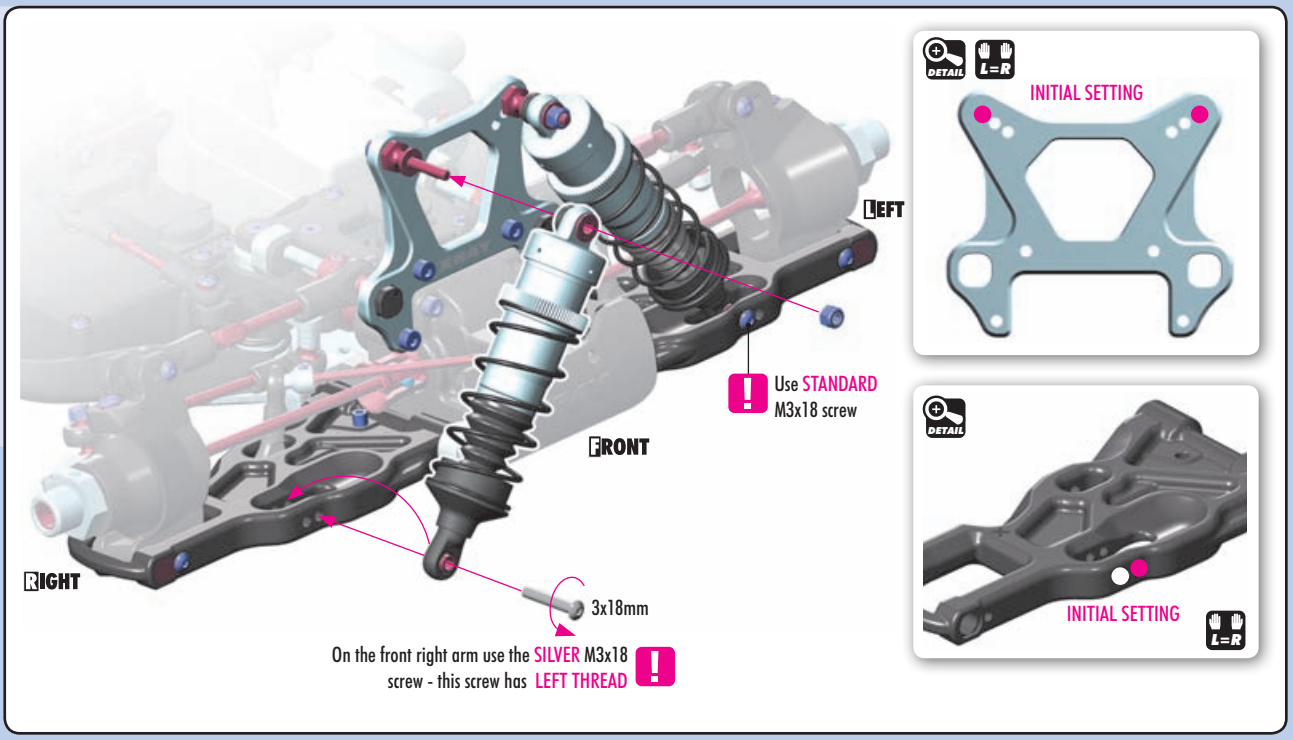
LEFT
FRONT
RIGHT
Use STANDARD M3x18 screw
3x18mm
On the front right arm use the SILVER M3x18 screw - this screw has LEFT THREAD
DETAIL
L=R
INITIAL SETTING
DETAIL
INITIAL SETTING
L=R

MAINTENANCE

ENGINE OPERATION

PREPARING TO OPERATE THE ENGINE

- Never modify the engine or muffler.
- Confirm the position of needle and idling before running. Be sure to run a new engine smoothly.
- Make sure the air filter is clean and oiled.
- Never run your engine without an air filter. Your engine can be seriously damaged if dirt and debris get inside the engine.
- For proper engine break-in, please refer to the manual that came with the engine.
- The engine may not start or run properly if the air filter is dirty, or choked with sand and dust.
- If the fuel pipe is choked or deteriorates, the engine may not start, and there is danger that fuel will leak out.

STARTING AND RUNNING THE ENGINE

Be sure to observe the following starting process. Failure to do so may cause the model car to start suddenly, which may lead to damage or unexpected accidents.

1. Make sure the transmitter and receiver batteries are fully charged.
2. Make sure that your transmitter and receiver are both on the same frequency. If you have a transmitter with multiple model memory, make sure you have selected the proper profile for your car.
3. Put the car on the starter box and keep the tires from touching the ground.
4. Turn on the transmitter.
5. Turn on the receiver in the car.
6. Make sure the steering servo and engine servos work normally and adjust them correctly.
7. Put fuel in the fuel tank, and close the cap securely.
8. Apply the glow igniter to the engine glowplug.
9. Push the model car onto the starter box to start the engine. (If the engine is new, follow the instruction manual and be sure to break in the new engine properly).
10. When the engine has started, remove the glow igniter.
11. Follow your engine break-in procedure and tune the engine as appropriate.

STOPPING THE ENGINE

Before you stop the engine, try to make sure the engine is at idle first. There are several ways to stop the engine:

- Use a rag to cover the exhaust tip. Be careful! The exhaust is extremely hot so use a thick rag and gloves.
- Pinch the fuel tubing to stop the flow of fuel to the carb. Be careful, this can make the motor run lean which can damage the motor.
- Put your hand over the air filter, or squeeze the air filter element to block the airflow.
- Press an object (such as a screwdriver handle or shoe) against the rotating flywheel to stop its rotation. Be very careful, and do not stick your hand or fingers near the rotating flywheel.

FINISHING OPERATIONS

1. Stop the engine.
2. Turn off the receiver in the car
3. Turn off the transmitter.

MAINTENANCE AFTER RUNNING

Take proper care of your car after running to keep it performing well, and take notice of any damage and wear.

1. Do not leave fuel in the tank.
2. Go outside to drain any residual fuel from the exhaust pipe.
3. Clean the car and remove all sand, mud, and other debris.
4. Use after-run oil in your engine after you have finished running for the day.

SHOCK MAINTENANCE

The most important maintenance task for keeping consistent shock performance is refilling and bleeding them correctly. If built correctly, it will not be necessary to re-build them often. Replacing warped/hard rubber bladders and o-rings, scarred piston rods, or shaved/split/loose composite upper and lower ball joints are also important.

- For club racing, it is recommended to check the shocks for air inside before each race and only re-fill and bleed them if necessary. Before each race day, make sure you take the spring off of each shock, hold it up to your ear, and quickly compress the shock rod fully into the body while listening for any air making a "whistling" or "squishy" sound as it passes through the piston holes. If you hear any air, refill and bleed your shocks. For high-competition racing, it is recommended that the shocks be re-filled and bled before a large event.
- If building or pairing new shocks, always make sure they are the same length using a shock length measuring tool and adjust the lower ball joints as needed.
- If installing new rubber bladders, carefully trim the thin excess rubber from the edges of their lips. Curved body scissors work the best.
- Regularly inspect the amount of dirt on the felt protector in the shocks (if present) and regularly replace with a new one.
- During regular shock operation, oil naturally gets on the shock shaft and drop-by-drop slightly gets out of the shock body. Shocks should be inspected regularly after each race, and oil replaced as required.

BEARING MAINTENANCE

Ball-bearings in an off-road car or truggy must be properly maintained for smooth operation and long lifespan.

Typically, the ball-bearings included in new cars are greased for highest lifespan and as such the drivetrain may not seem to be as free as with lightly-oiled ball-bearings. However, when the car is run the ball-bearings will become more free and the drivetrain will become very efficient.

There are several types of bearings discussed here: bearings which already come greased from the factory, bearings which must be lubricated using the HUDY Bearing Grease, and then there are also bearings in the steering system which need to be lubricated with HUDY Bearing Oil.

The following procedures are recommended to clean all of the bearings in your off-road car or truggy. For high-competition racing, we recommended doing this every 3-4 weeks, or before a major race.

1. Remove the seals on both sides of the bearing (if present). If the seals bend a little and you can see a kink, carefully flatten the kink out by hand.
2. Spray the seals with motor cleaner and blow dry with compressed air.
3. Spray the bearing on both sides with motor cleaner.
4. Spin the bearing while it is still wet to dislodge any particles with the cleaner.
5. Spray the bearing on both sides again.
6. Blow both sides of the bearing dry with compressed air to make sure particles come out.
7. Hold the inner part of the bearing with my left thumb/forefinger and spin it to make sure it spins free without any abnormal vibrations or sounds.
8. Place one drop of bearing oil into each side of the bearing.
9. Replace both seals at the same time by lining them up on each side of the bearing and lightly pressing them in all the way around the bearings circumference with your thumb and forefinger. Do not press too hard or use any type of tool, such as a wrench tip, to push the blue seals in as they will push in too far, bend and cause drag.

If you spin test the bearing after you have re-oiled and sealed it, it will not spin freely for an extended period of time. The lightest of oils may allow it to spin for 1-2 seconds. This is normal and once you have mounted the bearings in the car again, the drive train will spin freely.

Make sure you use a motor cleaner that does not leave a residue after it dries as this may cause drag and wear in the bearings.

CLUTCH BEARINGS

To prolong the lifespan of the clutch bearings, they must be regularly cleaned and lubricated (preferably after each run) using a high-quality grease such as HUDY Bearing Grease. However, after some time the clutch bearings must be replaced with new ones.

RECOMMENDED PRODUCTS

- Use HUDY Bearing Grease to regularly lubricate grease-bearing ball-bearings.
- Use HUDY Bearing Oil to lubricate the bearings of the steering system.
- Use HUDY Bearing Grease to regularly lubricate the clutch bearings.

HUDY #106213

HUDY #106220

HUDY #106222

HUDY #106221

HUDY #106230

PROBLEM	CAUSE	SOLUTION
CAR IS HARD TO CONTROL	• Weak transmitter and/or receiver batteries • Low reception from radio antennas • Servo linkages not adjusted properly	• Recharge or replace batteries • Fully extend transmitter and receiver antennas • Move servo to neutral then re-adjust linkage(s)
STEERING DOES NOT WORK PROPERLY	• Weak transmitter and/or receiver batteries • Bent linkages or driveshafts • Loose steering components • Drivetrain damage	• Recharge or replace batteries • Check tightness of steering components and tighten if necessary • Replace damaged parts
HANDLING PROBLEMS	• Shocks are not working properly • Suspension is binding • Improper tires	• Rebuild the shocks and replace worn or broken parts • Make sure suspension moves freely. Replace worn or broken parts • Use different tires
STEERING FEELS SLUGGISH OR VAGUE	• Suspension is binding • Damaged steering servo	• Make sure suspension moves freely, and replace worn or broken parts • Check the steering servo for damage and wear, and replace/repair if necessary
THE CAR DOES NOT DRIVE STRAIGHT	• Suspension is binding • Steering trim is off-center • Wheels are loose • Damaged steering servo	• Make sure suspension moves freely, and replace worn or broken parts • Adjust steering trim until car drives straight • Check the make sure the wheel nuts are properly tightened • Check the steering servo for damage and wear, and replace/repair if necessary

www.teamxray.com

XRAY EUROPE

XRAY, K VÝSTAVISKU 6992, 91101 TRENCIN, SLOVAKIA, EUROPE
PHONE: +421-32-740 11 00, FAX: +421-32-740 11 09, info@teamxray.com

XRAY USA

RC AMERICA, 2030 Century Center Blvd #15, Irving, TX 75062, USA
PHONE: 214-744-2400, FAX: 214-744-2401, xray@rcamerica.com

MADE IN SLOVAKIA EUROPE

/TeamXray /TeamXray /TeamXray /TeamXrayRC /XrayRacing /XrayRacing