Venture18 1985 Toyota Hilux SR5

Exploded View
Explosionszeichnung
Vue éclatée
展開図

VENTURE 18

160600	Venture18 1985 Toyota Hilux SR5 - Black
160601	Venture18 1985 Toyota Hilux SR5 - Red
160602	Venture18 Flux 1985 Toyota Hilux SR5 - Black
160603	Venture18 Flux 1985 Toyota Hilux SR5 - Red

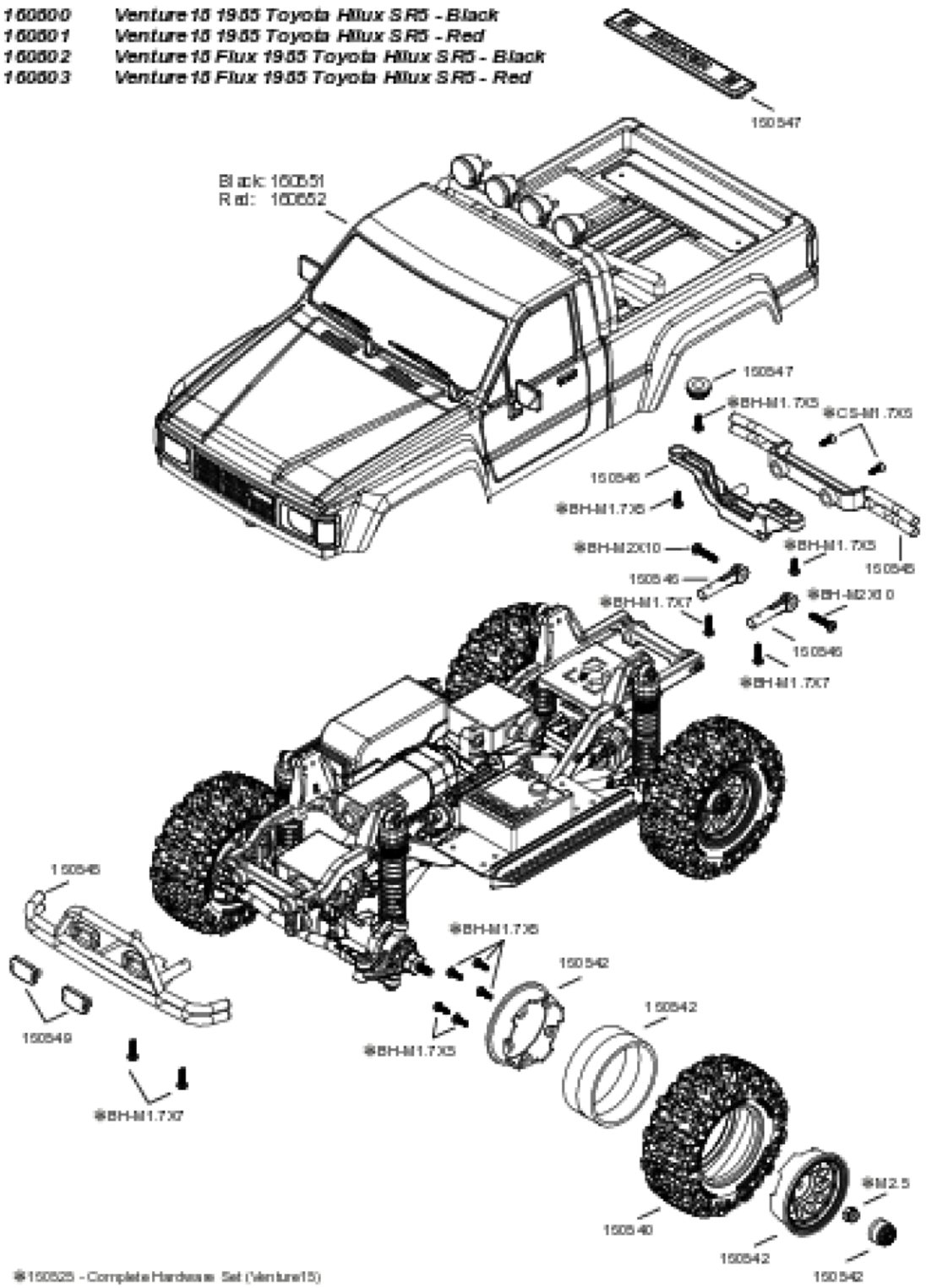

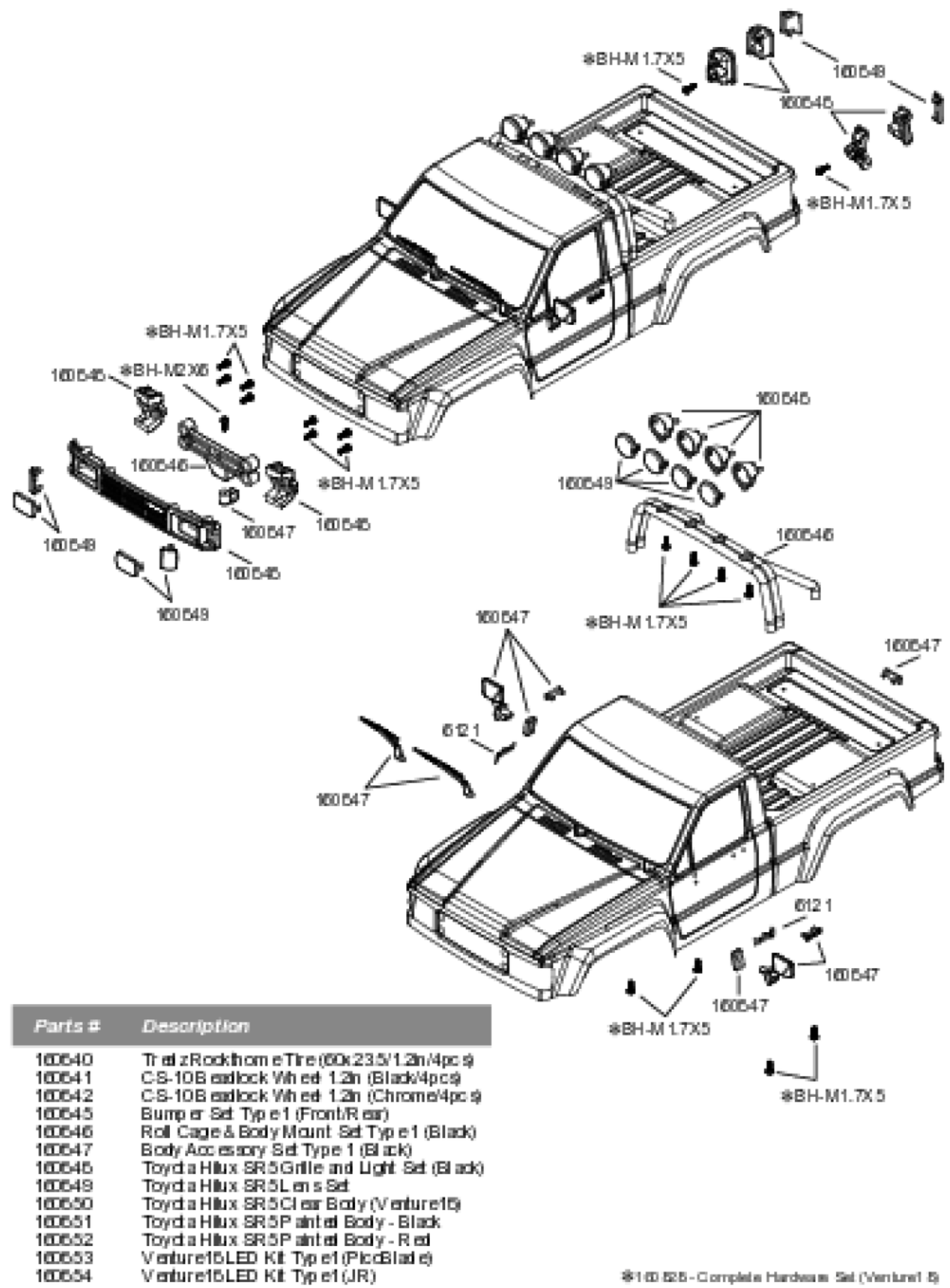

Parts #	Description
160640	Trail zRockthorne Tire (60x23.5/1.2in/4pcs)
160641	CS-10Beadlock Wheel 1.2in (Black/4pcs)
160642	CS-10Beadlock Wheel 1.2in (Chrome/4pcs)
160645	Bumper Set Type1 (Front/Rear)
160646	Roll Cage & Body Mount Set Type1 (Black)
160647	Body Accessory Set Type 1 (Black)
160648	Toyota Hilux SR5 Grille and Light Set (Black)
160649	Toyota Hilux SR5 Lens Set
160650	Toyota Hilux SR5 Clear Body (Venture18)
160651	Toyota Hilux SR5 Painted Body - Black
160652	Toyota Hilux SR5 Painted Body - Red
160653	Venture18 LED Kit Type1 (PicoBlade)
160654	Venture18 LED Kit Type1 (JR)