Venture18 1985 Toyota Hilux SR5

Exploded View
Explosionszeichnung
Vue éclatée
展開図

VENTURE 18

160800 Venture 18 1985 Toyota Hilux SR5 - Black
160801 Venture 18 1985 Toyota Hilux SR5 - Red
160802 Venture 18 Flux 1985 Toyota Hilux SR5 - Black
160803 Venture 18 Flux 1985 Toyota Hilux SR5 - Red

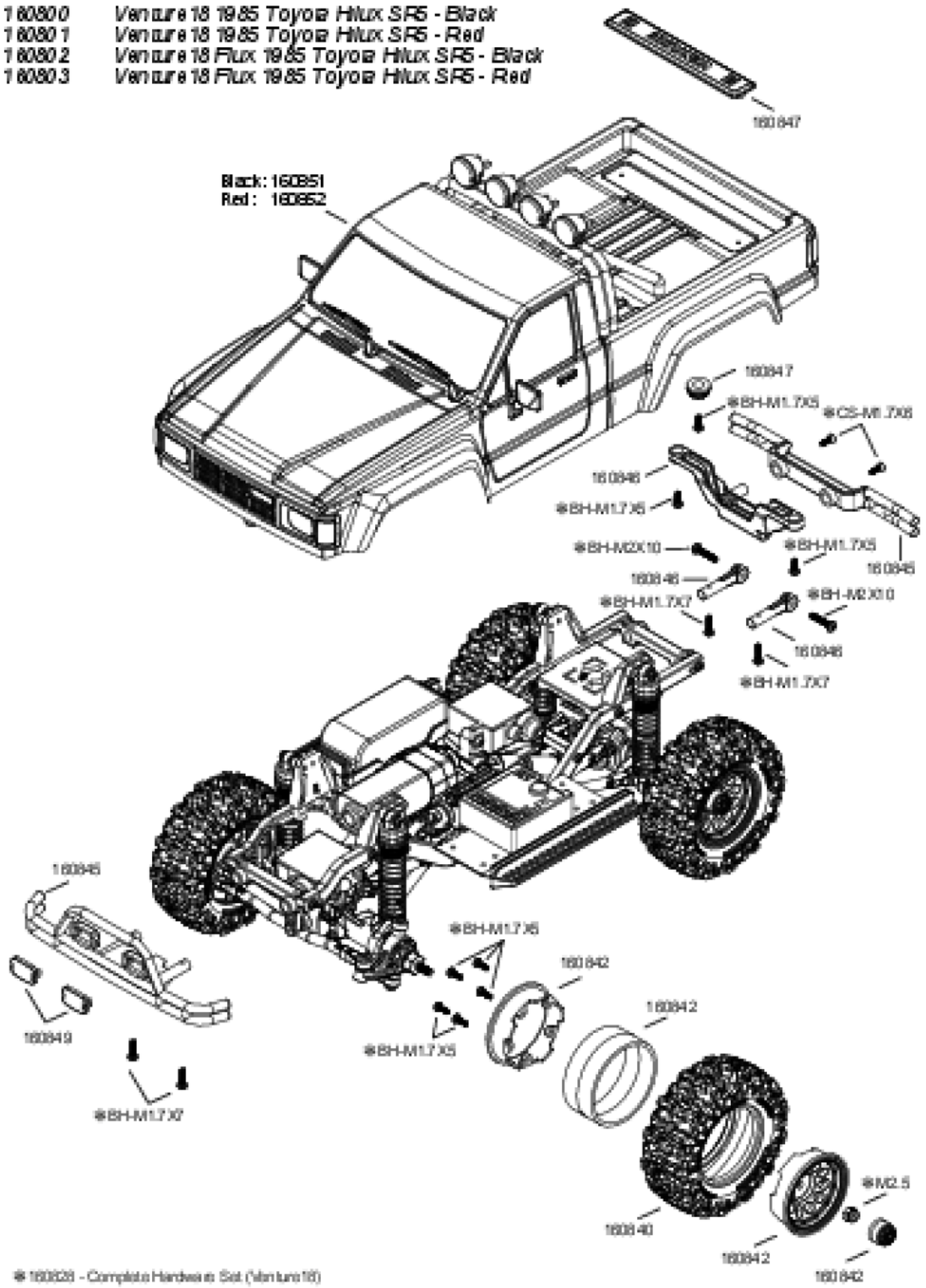

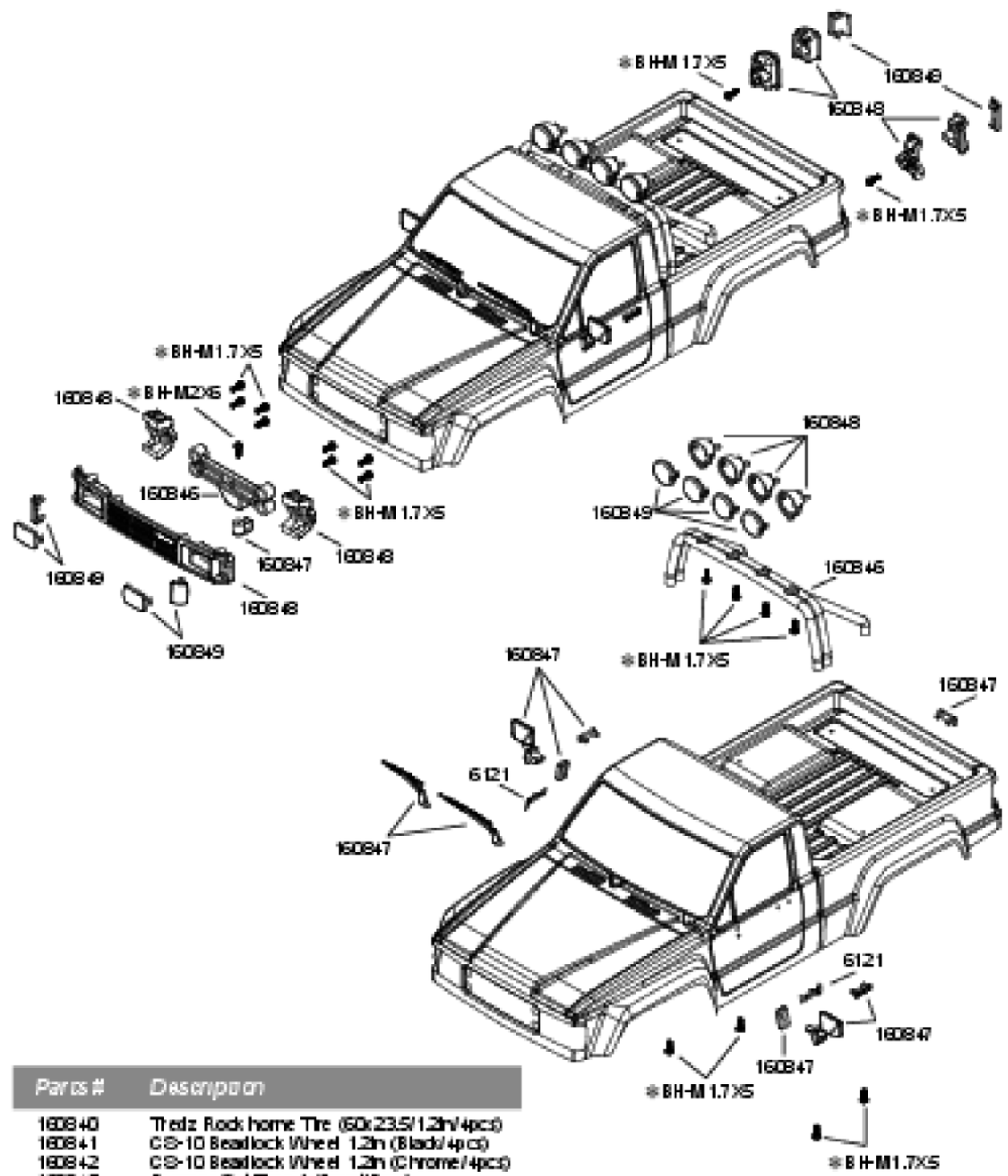

Parts #	Description
160840	Tredz Rock home Tire (60x23.5/1.2in/4pcs)
160841	CS-10 Beadlock Wheel 1.2in (Black/4pcs)
160842	CS-10 Beadlock Wheel 1.2in (Chrome/4pcs)
160845	Bumper Set Type 1 (Front/Rear)
160846	Roll Cage & Body Mount Set Type 1 (Black)
160847	Body Accessory Set Type 1 (Black)
160848	Toyota Hilux SR5 Grille and light Set (Black)
160849	Toyota Hilux SR5 Lens Set
160850	Toyota Hilux SR5 Clear Body (Venture 18)
160851	Toyota Hilux SR5 Painted Body - Black
160852	Toyota Hilux SR5 Painted Body - Red
160853	Venture 18 LED Kit Type 1 (PicoBlade)
160854	Venture 18 LED Kit Type 1 (JR)

※160828 - Complete Hardware Set (Venture18)

※160828 - Complete Hardware Set (Venture18)